REVISION RECORD			
LTR	ECO NO:	APPROVED:	DATE:

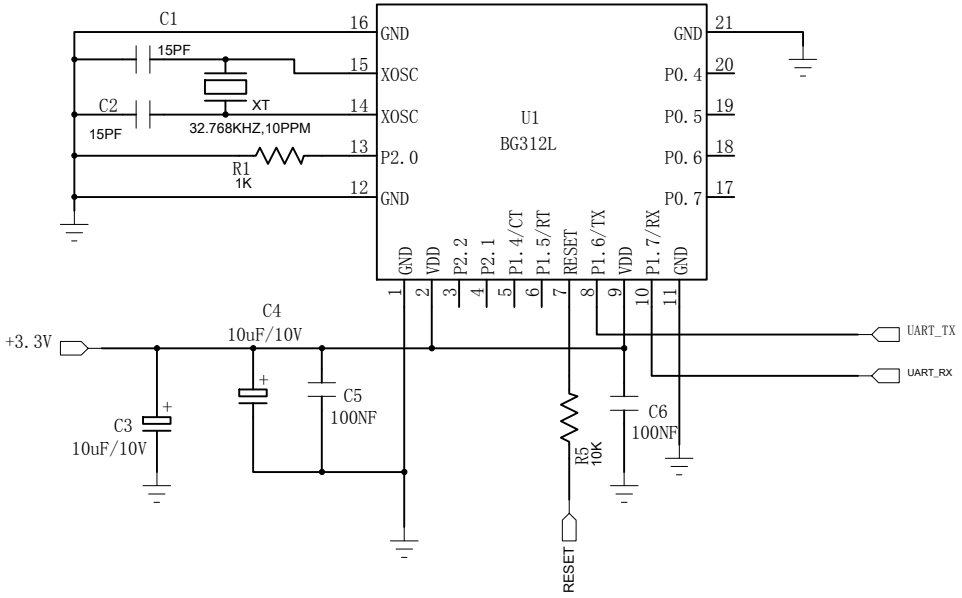

S-Power Electronics LTD	
MODEL: BG312L	TITLE: BG312L
DATE: Nov15,2012	
DRAWN BY: Ball_Jiang	
CHECK BY:	VER NO: REV10
APPROVED BY:	PAGE: 1 OF 1