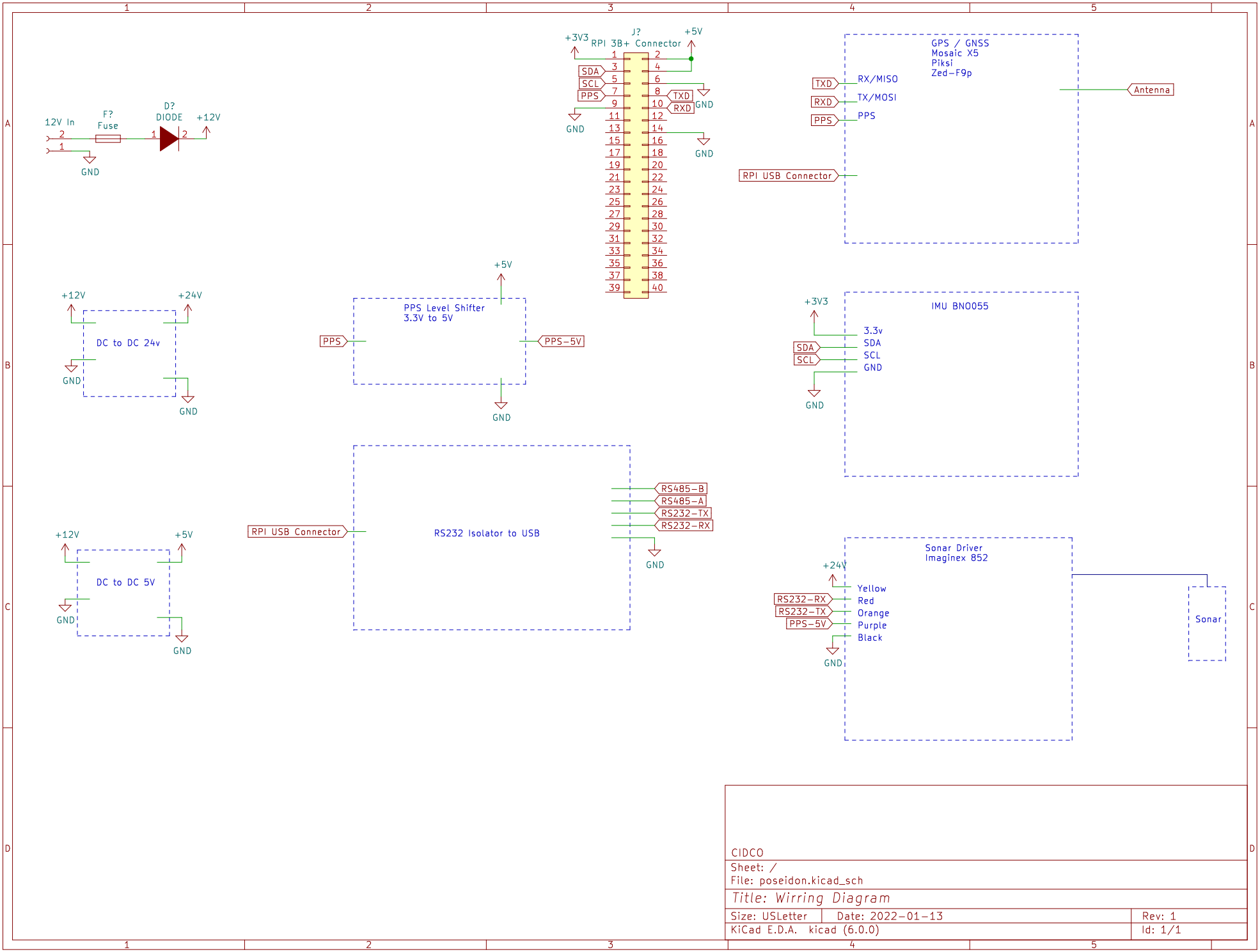

CIDCO

Sheet: /

File: poseidon.kicad_sch

Title: Wirring Diagram

Size: USLetter	Date: 2022-01-13	Rev: 1
KiCad E.D.A. kicad (6.0.0)		Id: 1/1