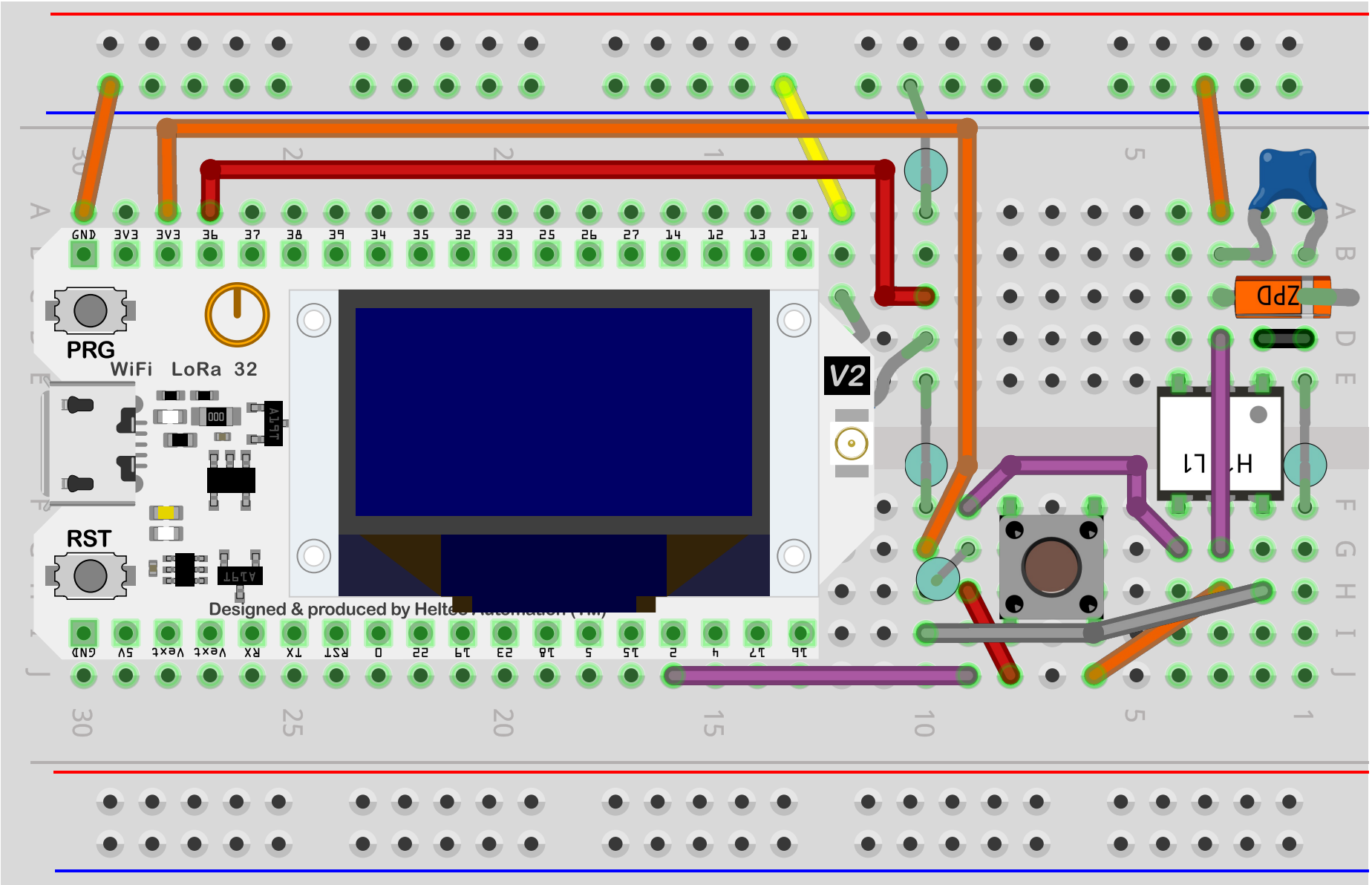
PRG
WiFi LoRa 32
RST
V2
Designed & produced by Heltec Automation (TM)
GND 3V3 3V3 36 37 38 39 34 35 32 33 25 26 27 14 12 13 21
GND 5V Vext Vext RX TX RST 0 22 19 23 18 5 15 2 4 17 16
ZPD
H7 L1

fritzing