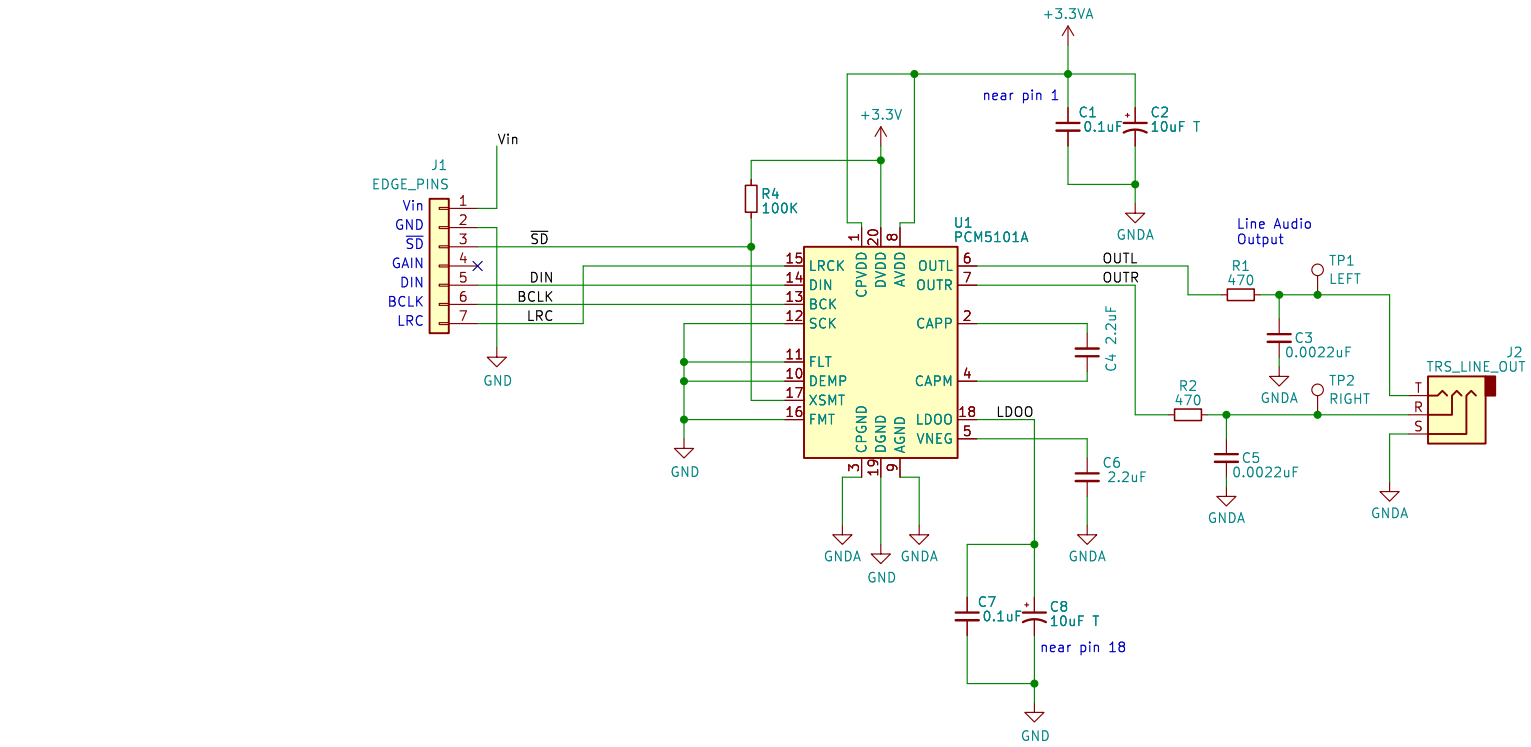

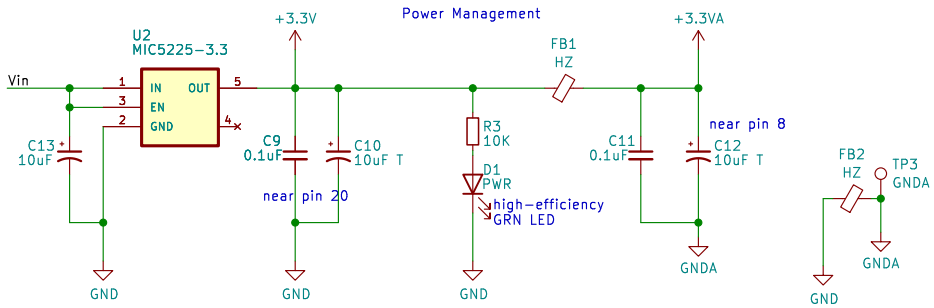

Cedar Grove Studios

Sheet: /

File: PCM510xA_I2S_DAC.kicad_sch

Title: PCM510x_I2S_DAC Breakout

Size: USLetter	Date: 2023-10-22	**Rev: 1.0.0**
KiCad E.D.A. kicad 7.0.8		Id: 1/1