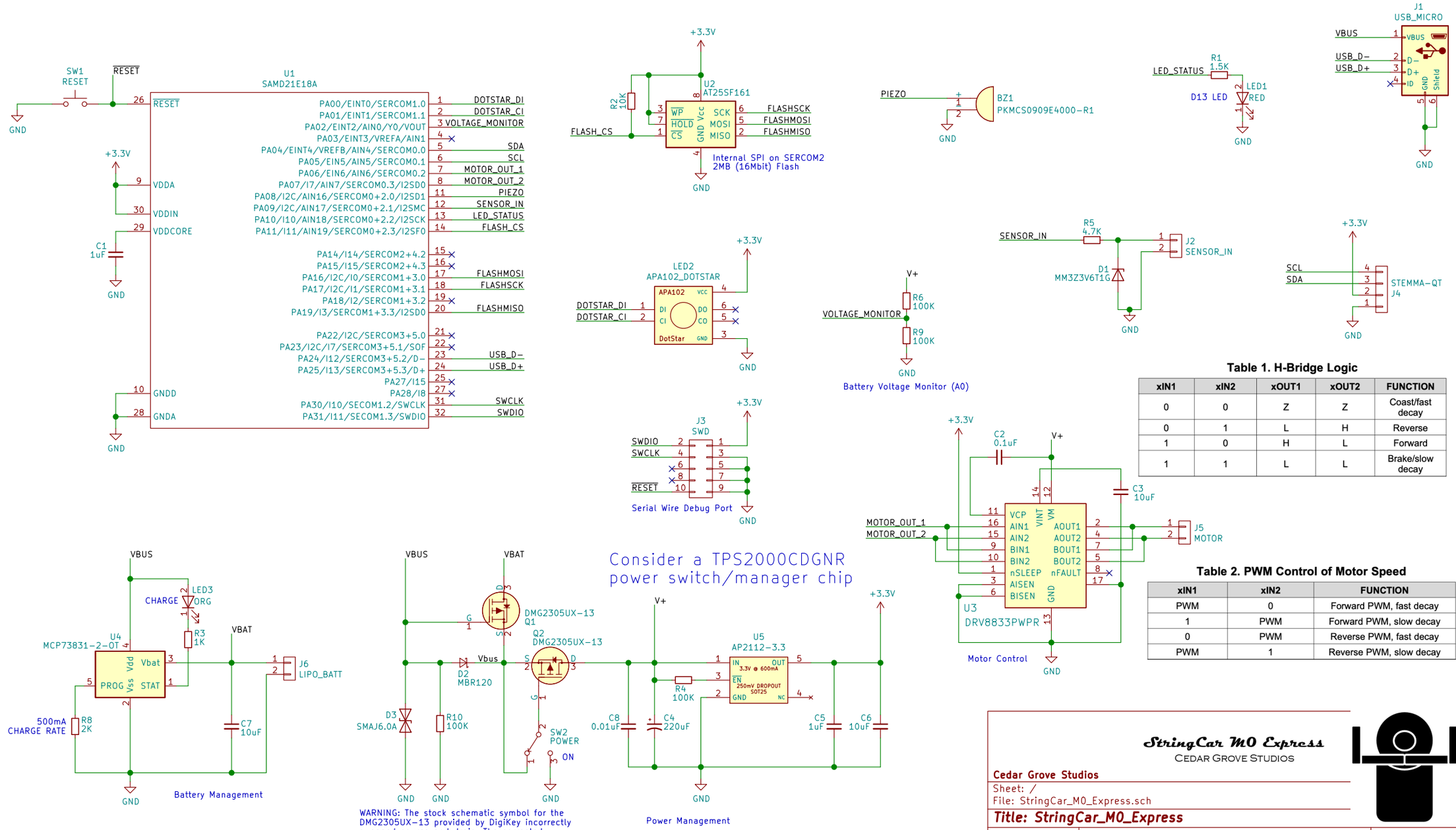

Table 1. H-Bridge Logic

xIN1	xIN2	xOUT1	xOUT2	FUNCTION
0	0	Z	Z	Coast/fast decay
0	1	L	H	Reverse
1	0	H	L	Forward
1	1	L	L	Brake/slow decay

Table 2. PWM Control of Motor Speed

xIN1	xIN2	FUNCTION
PWM	0	Forward PWM, fast decay
1	PWM	Forward PWM, slow decay
0	PWM	Reverse PWM, fast decay
PWM	1	Reverse PWM, slow decay