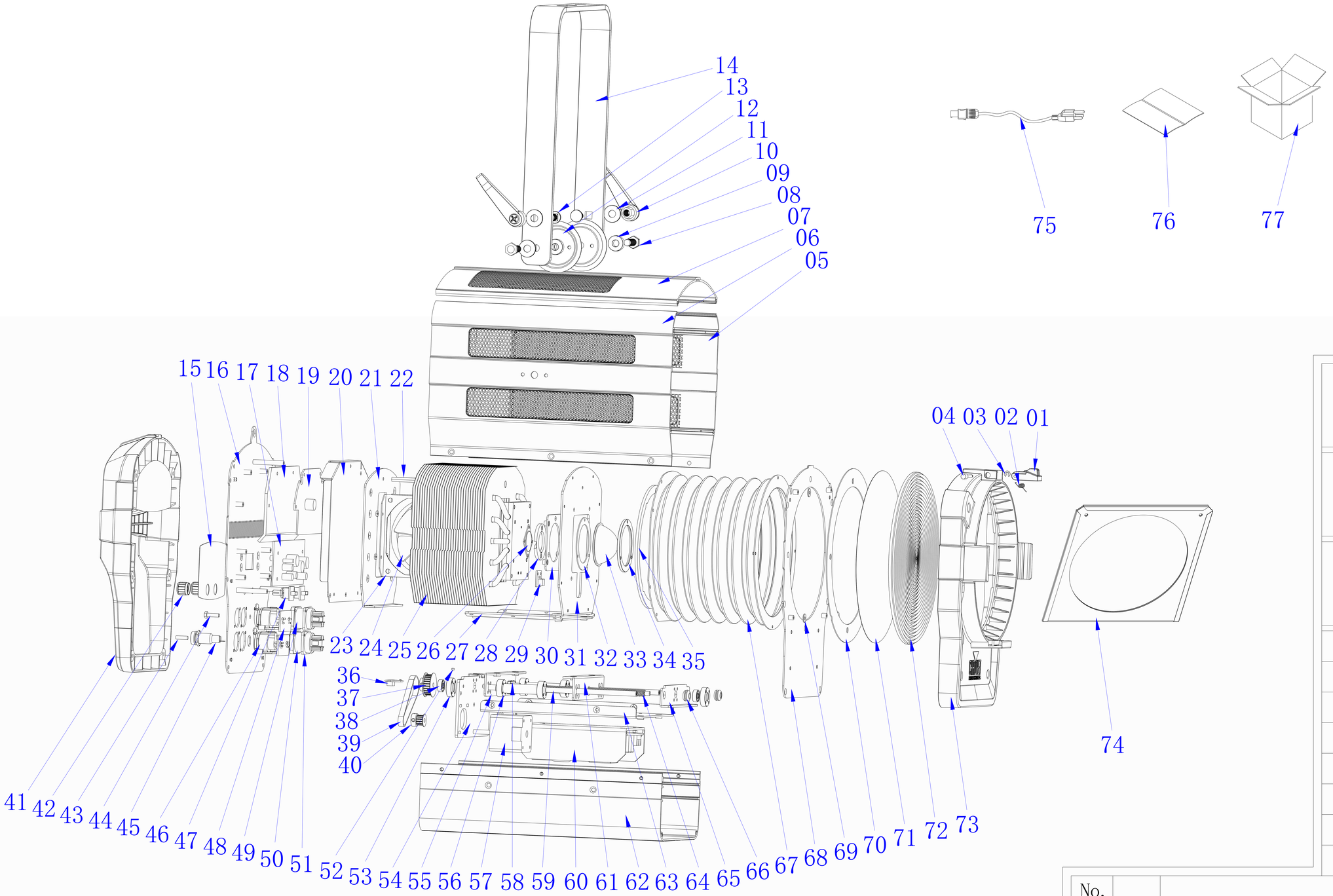

	1100800013
	CH-F265 WW
	CH-F265 WW
	CH-F265 WW-100
	2017-06-06

No.			
1			
2			
3			
4			

	EK-QR-RD-024-(--)	1	1

EXPLODED DIAGRAM REF STATIC	FIXTURE	PART NUMBER	DESCRIPTION	URL STATIC
1	OVATIONF265WW/03031388	PTJ4020100174	LOCK (BOM#1)	https://chauvetvip.com/products/PTJ4020100174_LOCK
2	OVATIONF265WW/03031388	PTJ3021600094	SPRING (BOM#2)	https://chauvetvip.com/products/PTJ3021600094_SPRING
3	OVATIONF265WW/03031388	PTJ3021600102	C-RING (BOM#3)	https://chauvetvip.com/products/PTJ3021600102_C-RING
4	OVATIONF265WW/03031388	PTJ3030800007	SAFETY PIN (BOM#4)	https://chauvetvip.com/products/PTJ3030800007_SAFETY-PIN
5	OVATIONF265WW/03031388	PTJ4010303722	SIDE PANEL 2 (BOM#5)	
6	OVATIONF265WW/03031388	PTJ4010303721	SIDE PANEL 1 (BOM#6)	
7	OVATIONF265WW/03031388	PTJ4010303723	TOP COVER (BOM#7)	
8	OVATIONF265WW/03031388	PTJ3021700587	HM SCREW (BOM#8)	https://chauvetvip.com/products/PTJ3021700587_HM-SCREW
9	OVATIONF265WW/03031388	PTJ3030100216	PILLAR (BOM#9)	
10	OVATIONF265WW/03031388	PTF1340110771	M8 BRACKET ADJUSTMENT KNOB/SHANK (B	https://chauvetvip.com/products/PTF1340110771_M8-HANDLE-(BOM#35)
11	OVATIONF265WW/03031388	PTJ3021700452	RING (BOM#11)	https://chauvetvip.com/products/PTJ3021700452_RING-(BOM#21)
12	OVATIONF265WW/03031388	PTJ4010302483	SEMI-CIRCLE METAL PART (BOM#12)	https://chauvetvip.com/products/PTJ4010302483_HANGING-BRACKET-SLICE
13	OVATIONF265WW/03031388	PTJ3021700412	LARGE INSIDE SCREW HANGING BRACKET(BC	https://chauvetvip.com/products/PTJ3021700412_SCREW-INSIDE-HANGING-BRACKET-(BOM#5)
14	OVATIONF265WW/03031388	PTJ4010303719	HANGING BRACKET (BOM#14)	https://chauvetvip.com/products/PTJ4010303719_HANGING-BRACKET
15	OVATIONF265WW/03031388	PTJ3050802223	DISPLAY STICKER (BOM#15)	https://chauvetvip.com/products/PTJ3050802223_DISPLAY-STICKER
16	OVATIONF265WW/03031388	PTJ4010303735	REAR (BOM#16)	
18	OVATIONF265WW/03031388	PTJ4010303737	DRIVER HOLDER (BOM#18)	
19	OVATIONF265WW/03031388	PTJ2020201492	DRIVER PCB (BOM#19)	https://chauvetvip.com/products/PTJ2020201492_DRIVER-PCB-(BOM#22)
20	OVATIONF265WW/03031388	PTJ4010303734	SHADOW SHIELD FOR REAR (BOM#20)	
21	OVATIONF265WW/03031388	PTJ4010303726	HEAT SINK PLATE (BOM#21)	https://chauvetvip.com/products/PTJ4010303726_HEAT-SINK-PLATE
22	OVATIONF265WW/03031388	PTJ3030100218	CONNECTER (BOM#22)	
23	OVATIONF265WW/03031388	PTJ4010103578	FAN HOLDER (BOM#23)	
24	OVATIONF265WW/03031388	PTJ3020900072	DC FAN (BOM#24)	https://chauvetvip.com/products/PTJ3020900072_DC-FAN
25	OVATIONF265WW/03031388	PTJ4010103590	HEAT SINK (BOM#25)	
26	OVATIONF265WW/03031388	PTJ3010500249	LED (BOM#26)	https://chauvetvip.com/products/PTJ3010500249_LED
27	OVATIONF265WW/03031388	PTJ4010303727	CONNECTOR PANEL (BOM#27)	
28	OVATIONF265WW/03031388	PTJ4020100197	LED HOLDER (BOM#28)	
29	OVATIONF265WW/03031388	PTJ2020200739	THERMAL SWITCHES (BOM#29)	https://chauvetvip.com/products/PTJ2020200739_thERMAL-SWITCHES
30	OVATIONF265WW/03031388	PTJ4010303710	ASPHERIC SURFACE LENS HOLDER (BOM#30)	
31	OVATIONF265WW/03031388	PTJ4010303725	HEAT SINK HOLDER (BOM#31)	
32	OVATIONF265WW/03031388	PTJ3021200032	GLASS RING (BOM#32)	
33	OVATIONF265WW/03031388	PTJ3020100388	ASPHERIC SURFACE LENS (BOM#33)	https://chauvetvip.com/products/PTJ3020100388_ASPHERIC-SURFACE-LENS
34	OVATIONF265WW/03031388	PTJ4010103574	ASPHERIC SURFACE LENS HOLDER (BOM#34)	
35	OVATIONF265WW/03031388	PTJ3021700899	FOAM (BOM#35)	
36	OVATIONF265WW/03031388	PTJ2020200635	HALL ELEMENT LOCATER (BOM#36)	https://chauvetvip.com/products/PTJ2020200635_HALL-ELEMENT-LOCATER
37	OVATIONF265WW/03031388	PTJ3030300049	DRIVING GEAR (BOM#37)	
38	OVATIONF265WW/03031388	PTJ3020500049	BEARING (BOM#38)	https://chauvetvip.com/products/PTJ3020500049_BEARING
39	OVATIONF265WW/03031388	PTJ3020600053	SYNCHRONOUS BELT (BOM#39)	https://chauvetvip.com/products/PTJ3020600053_SYNCHRONOUS-BELT
40	OVATIONF265WW/03031388	PTJ3030300028	DRIVING WHEEL (BOM#40)	
41	OVATIONF265WW/03031388	PTJ4020100199	BACK HOUSING (BOM#41)	
42	OVATIONF265WW/03031388	PTJ3030900007B	KNOB (BOM#42)	https://chauvetvip.com/products/PTJ3030900007B_ROTARY-KNOB
43	OVATIONF265WW/03031388	3.15AMPGMA	T3.15AL250V FUSE (BOM#43)	https://chauvetvip.com/products/3.15AMPGMA_FUSE
44	OVATIONF265WW/03031388	PTJ3021700154	HM SCREW (BOM#44)	https://chauvetvip.com/products/PTJ3021700154_HM-SCREW
45	OVATIONF265WW/03031388	PTJ3027001001	Panel mount fuse holder (BOM#45)	https://chauvetvip.com/products/PTJ3027001001_FUSE-HOLDER
46	OVATIONF265WW/03031388	PTJ2010033700	DMX XLR SOCKET(5PIN) (BOM#46)	https://chauvetvip.com/products/PTJ2010033700_5-PINS-DMX-XLR-SOCKET
47	OVATIONF265WW/03031388	PTJ2020201971	SENSITIVITY PCB (BOM#47)	https://chauvetvip.com/products/PTJ2020201971_POTENTIOMETER-PLATE
48	OVATIONF265WW/03031388	PTJ2010325000	DMX XLR SOCKET (BOM#48)	https://chauvetvip.com/products/PTJ2010325000_DMX-XLR-SOCKET-PCB
49	OVATIONF265WW/03031388	PTF1001002302	POWER IN SOCKET - BLUE (BOM#49)	https://chauvetvip.com/products/PTF1001002302_POWER-INPUT-PLUG-(BLUE)
50	OVATIONF265WW/03031388	PTF1001002202	POWER OUT SOCKET - WHITE (BOM#50)	https://chauvetvip.com/products/PTF1001002202_POWER-OUTPUT-PLUG
51	OVATIONF265WW/03031388	PTJ4010302041	PRESSING PLATE (BOM#51)	
52	OVATIONF265WW/03031388	PTJ3022200009	MAGNET (BOM#52)	https://chauvetvip.com/products/PTJ3022200009_MAGNET
53	OVATIONF265WW/03031388	PTJ3030200023	FLANGE (BOM#53)	https://chauvetvip.com/products/PTJ3030200023_FLANGE
54	OVATIONF265WW/03031388	PTJ4010303732	SCREW FIXATION PLATE 2 (BOM#54)	
55	OVATIONF265WW/03031388	PTJ4010303730	PLAIN BEARING HOLDER 1 (BOM#55)	https://chauvetvip.com/products/PTJ4010303730_PLAIN-BEARING-HOLDER-1
56	OVATIONF265WW/03031388	PTJ3030100219	PLAIN BEARING (BOM#56)	
57	OVATIONF265WW/03031388	PTJ3021000084	STEPPER MOTOR (BOM#57)	
58	OVATIONF265WW/03031388	PTJ3030600020	SLIDER 2 (BOM#58)	
59	OVATIONF265WW/03031388	PTJ3030600030	FOCUSING LEVER (BOM#59)	https://chauvetvip.com/products/PTJ3030600030_FOCUSING-LEVER
60	OVATIONF265WW/03031388	PTJ3020400197	POWER SUPPLY (BOM#60)	https://chauvetvip.com/products/PTJ3020400197_POWER-SUPPLY-(BOM#10)
61	OVATIONF265WW/03031388	PTJ4010303729	PLAIN BEARING HOLDER (BOM#61)	https://chauvetvip.com/products/PTJ4010303729_PLAIN-BEARING-HOLDER
62	OVATIONF265WW/03031388	PTJ4010303733	HOUSING (BOM#62)	
63	OVATIONF265WW/03031388	PTJ4010303731	BASEBOARD (BOM#63)	
64	OVATIONF265WW/03031388	PTJ3030600031	SCREW FIXATION (BOM#64)	https://chauvetvip.com/products/PTJ3030600031_SCREW-FIXATION
65	OVATIONF265WW/03031388	PTJ4010303728	SCREW FIXATION PLATE 1 (BOM#65)	
66	OVATIONF265WW/03031388	PTJ3022500068	LOOP FOR FOCUSING LEVER (BOM#66)	https://chauvetvip.com/products/PTJ3022500068_LOOP-FOR-FOCUSING-LEVER
67	OVATIONF265WW/03031388	PTJ3021100026	PIPE (BOM#67)	
68	OVATIONF265WW/03031388	PTJ4010303724	FRONT PANEL (BOM#68)	
69	OVATIONF265WW/03031388	PTJ3021700679	METAL RING (BOM#69)	
70	OVATIONF265WW/03031388	PTJ3021700898	RING FOR THREAD LENS (BOM#70)	
71	OVATIONF265WW/03031388	PTJ3020300310	FILTER (BOM#71)	
72	OVATIONF265WW/03031388	PTJ3020100387	THREAD LENS (BOM#72)	https://chauvetvip.com/products/PTJ3020100387_thREAD-LENS
73	OVATIONF265WW/03031388	PTJ4020100198	FRONT COVER (BOM#73)	https://chauvetvip.com/products/PTJ4020100198_FRONT-COVER
74	OVATIONF265WW/03031388	PTJ4010303080A	GEL FRAME (BOM#74)	https://chauvetvip.com/products/PTJ4010303080A_GEL-FRAME
75	OVATIONF265WW/03031388	PTF2700003804	NEUTRIK US POWER CABLE 1.5M - 5FT (P	https://chauvetvip.com/products/PTF2700003804_Complete-Neutrix-power-cable
17) WW LED N	OVATIONF265WW/03031388	PTJ2020201935	MPCB (BOM#17) WW LED Not compatible with OVATIONF265T fixture	
N/A	OVATIONF265WW/03031388	PTJ5000000068	FRONT COVER ASSEMBLY	
N/A	OVATIONF265WW/03031388	UPLOAD03	UPLOAD03 ***Order from Location 1***	
N/A	OVATIONF265WW/03031388	PTJ2020201330	Display PCB	https://chauvetvip.com/products/PTJ2020201330_DISPLAY-PCB