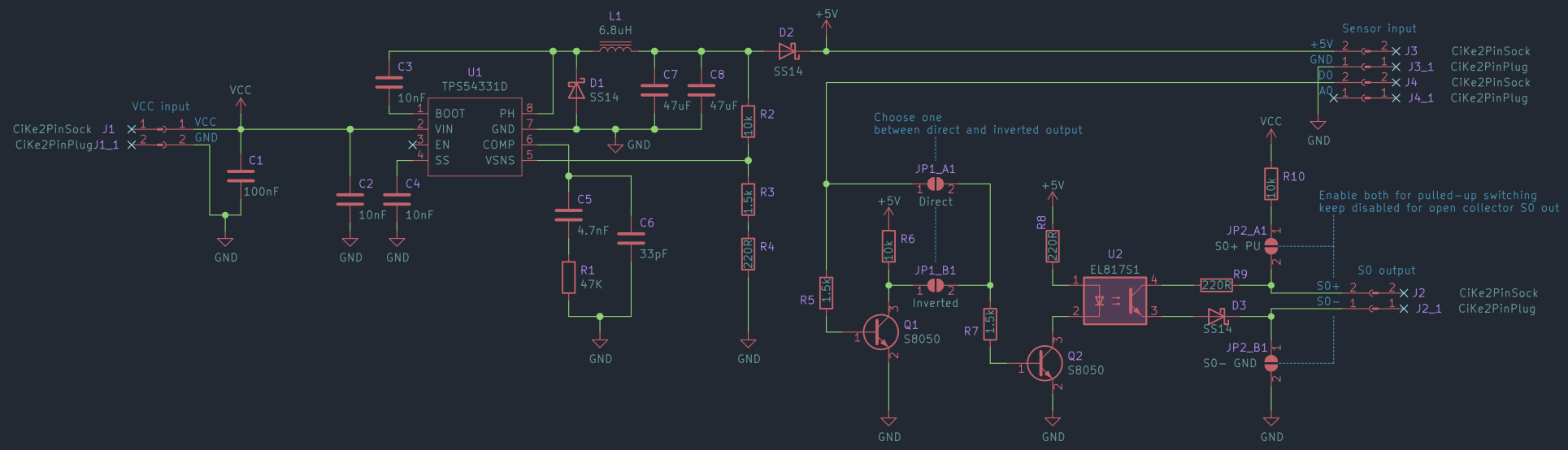

H1 MountingHole
H2 MountingHole
LOGO1 Binary-6
LOGO3 OSHW

Sheet: /
File: LasS0.kicad_sch

Title: LasS0

Size: A4	Date: 2021-06-03	**Rev: v0.1**
KiCad E.D.A. kicad (5.99.0-10624-g2131a44889)		Id: 1/1