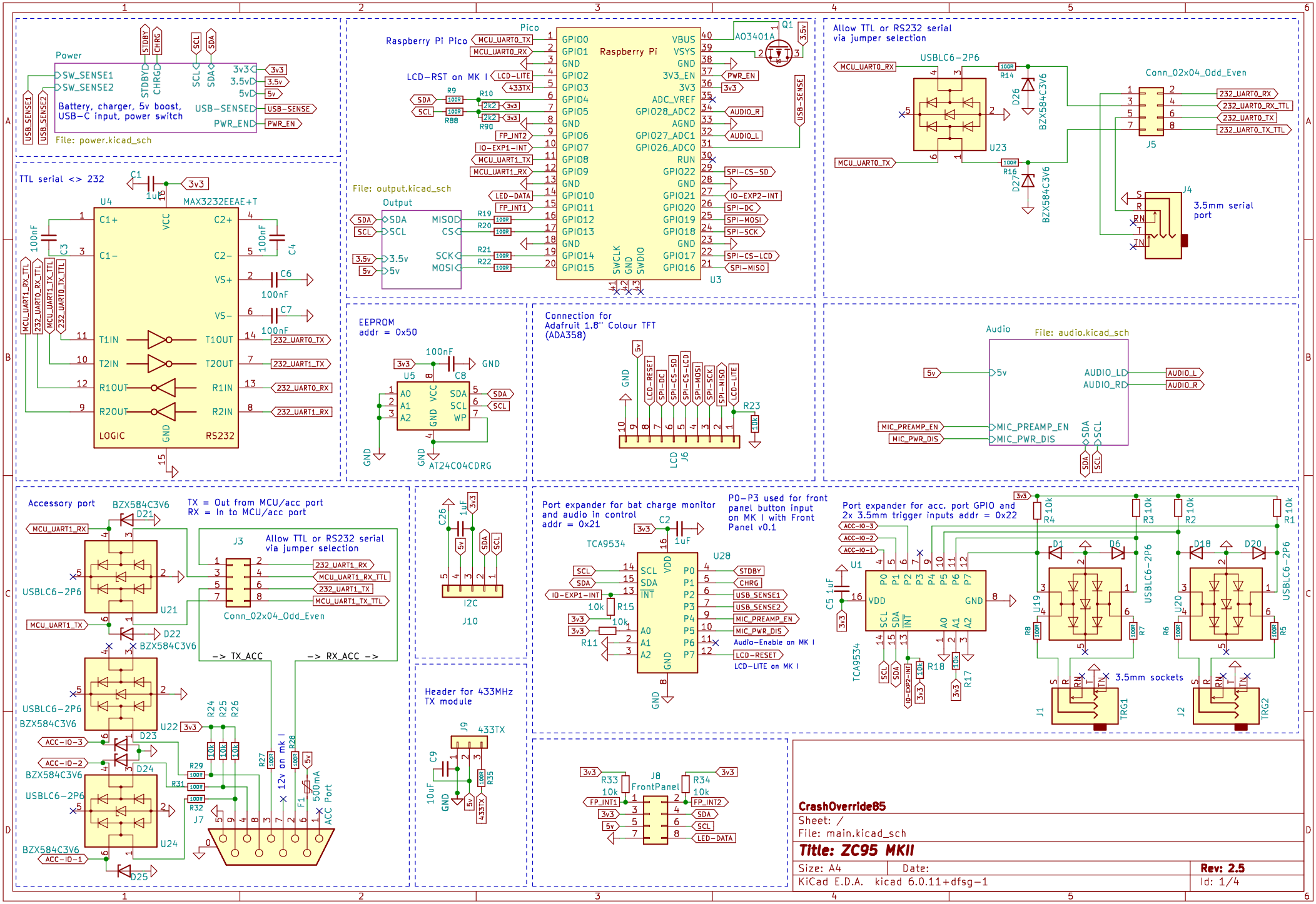
Power
SW_SENSE1
SW_SENSE2
STDBY
CHRG
SCL
SDA
3v3
3.5v
5v
USB-SENSE
PWR_EN
Battery, charger, 5v boost, USB-C input, power switch
File: power.kicad_sch
Pico
Raspberry Pi Pico
Raspberry Pi
LCD-RST on MK I
File: output.kicad_sch
Output
Q1
AO3401A
U3
Allow TTL or RS232 serial via jumper selection
USBLC6-2P6
U23
Conn_02x04_Odd_Even
J5
J4
3.5mm serial port
TTL serial <> 232
U4
MAX3232EEAE+T
LOGIC
RS232
EEPROM
addr = 0x50
U5
AT24C04CDRG
Connection for Adafruit 1.8" Colour TFT (ADA358)
LCD
J6
Audio
File: audio.kicad_sch
AUDIO_L
AUDIO_R
MIC_PREAMP_EN
MIC_PWR_DIS
Accessory port
BZX584C3V6
TX = Out from MCU/acc port
RX = In to MCU/acc port
J3
Allow TTL or RS232 serial via jumper selection
Conn_02x04_Odd_Even
-> TX_ACC
-> RX_ACC ->
12v on mk I
500mA
ACC Port
J7
I2C
J10
Header for 433MHz TX module
J9
433TX
Port expander for bat charge monitor and audio in control
addr = 0x21
TCA9534
U28
P0-P3 used for front panel button input on MK I with Front Panel v0.1
Audio-Enable on MK I
LCD-RESET
LCD-LITE on MK I
Port expander for acc. port GPIO and 2x 3.5mm trigger inputs addr = 0x22
U1
3.5mm sockets
J1
J2
TRG1
TRG2
J8
FrontPanel
CrashOverride85
Sheet: /
File: main.kicad_sch
Title: ZC95 MKII
Size: A4
Date:
Rev: 2.5
KiCad E.D.A. kicad 6.0.11+dfsg-1
Id: 1/4

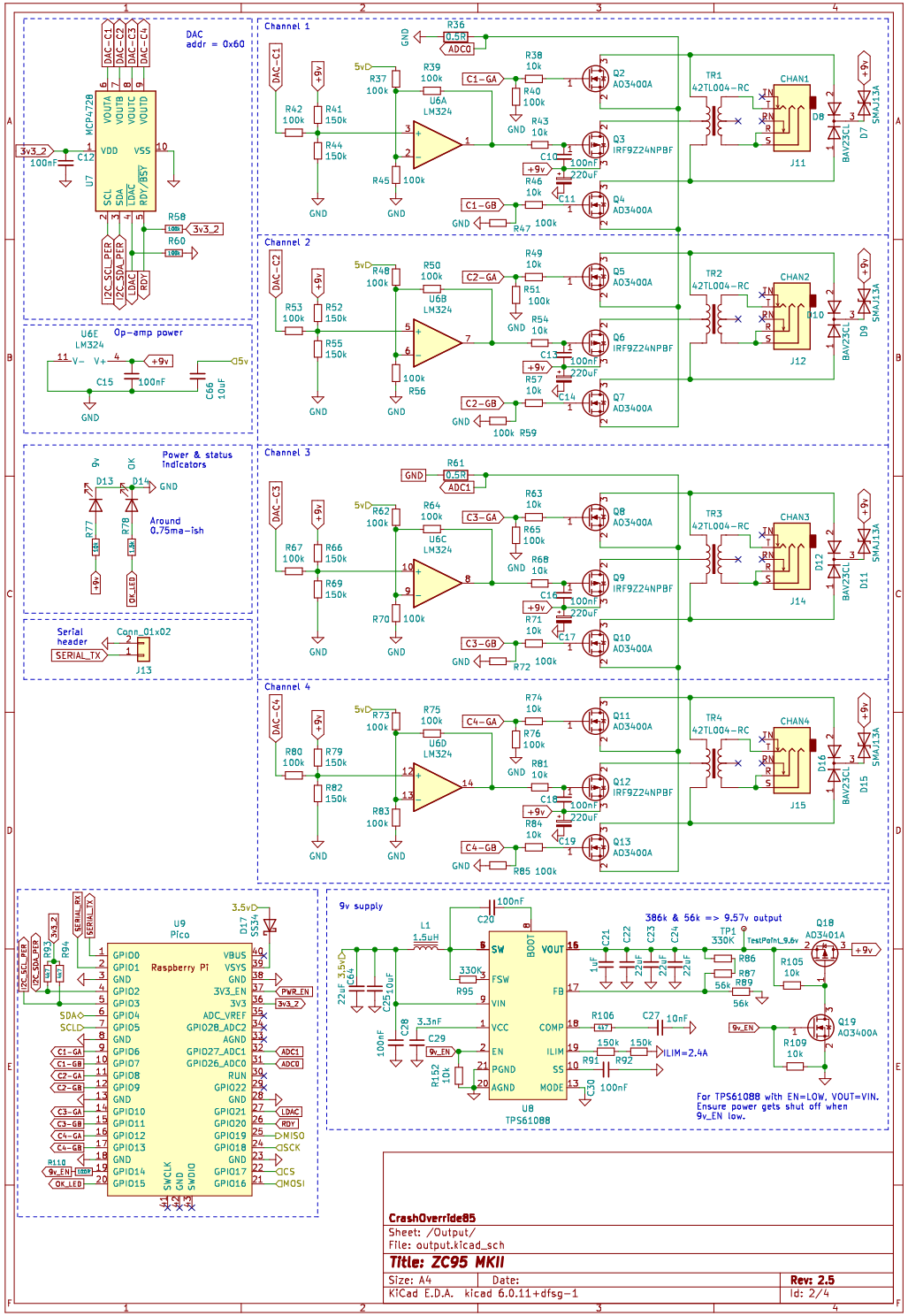


**CrashOverride85**

Sheet: /Output/

File: output.kicad_sch

**Title: ZC95 MKII**

| | | |
|---|---|---|
| Size: A4 | Date: | **Rev: 2.5** |
| KiCad E.D.A. kicad 6.0.11+dfsg-1 | | Id: 2/4 |

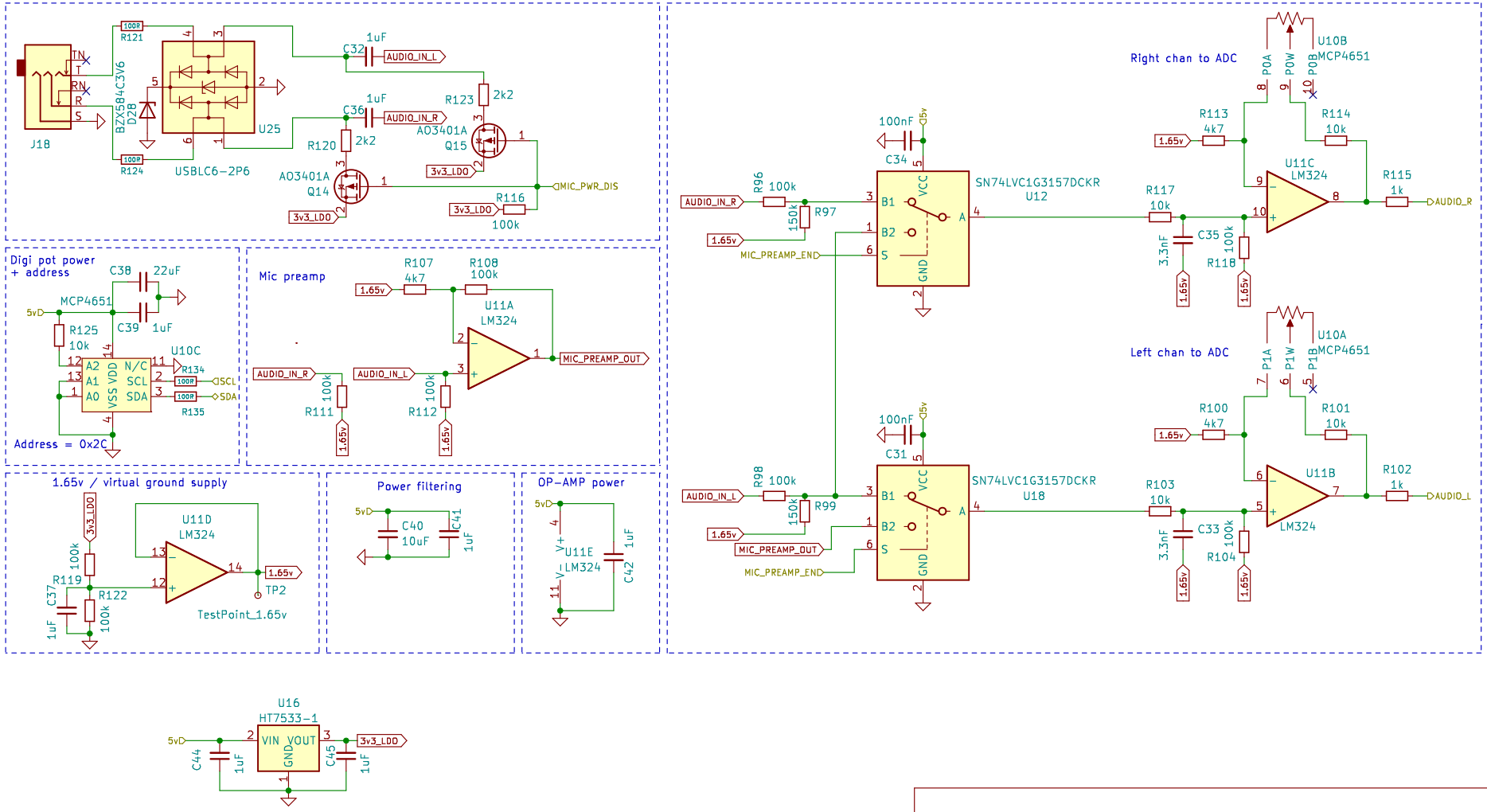


**CrashOverride85**

Sheet: /Audio/

File: audio.kicad_sch

**Title: ZC95 MKII**

| | | |
|---|---|---|
| Size: A4 | Date: | **Rev: 2.5** |
| KiCad E.D.A. kicad 6.0.11+dfsg-1 | | Id: 3/4 |

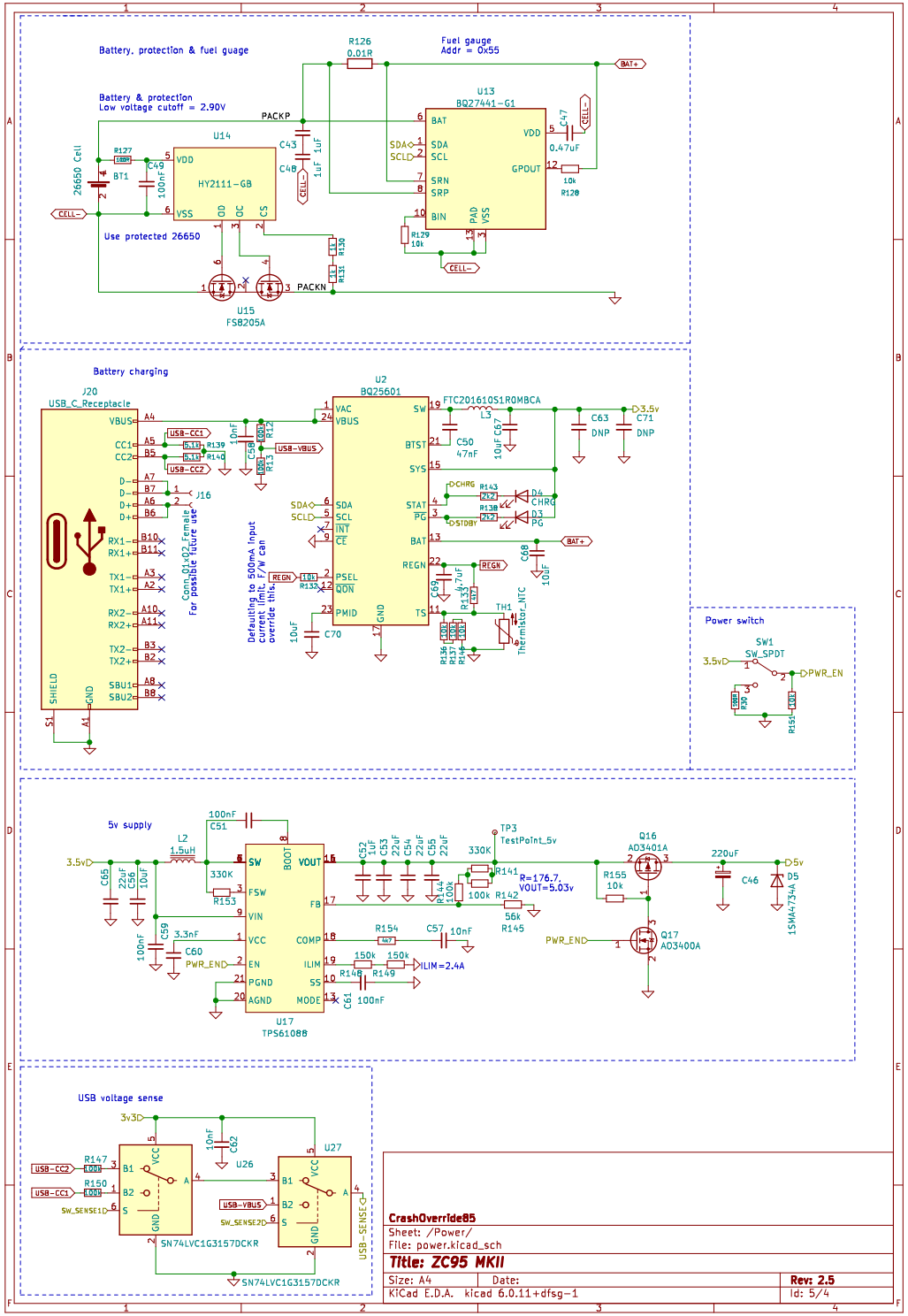


**CrashOverride85**

Sheet: /Power/

File: power.kicad_sch

**Title: ZC95 MKII**

| | | |
|---|---|---|
| Size: A4 | Date: | **Rev: 2.5** |
| KiCad E.D.A. kicad 6.0.11+dfsg-1 | | Id: 5/4 |