MCU

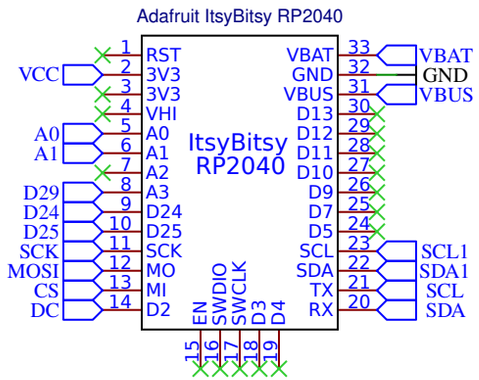

BATTERY

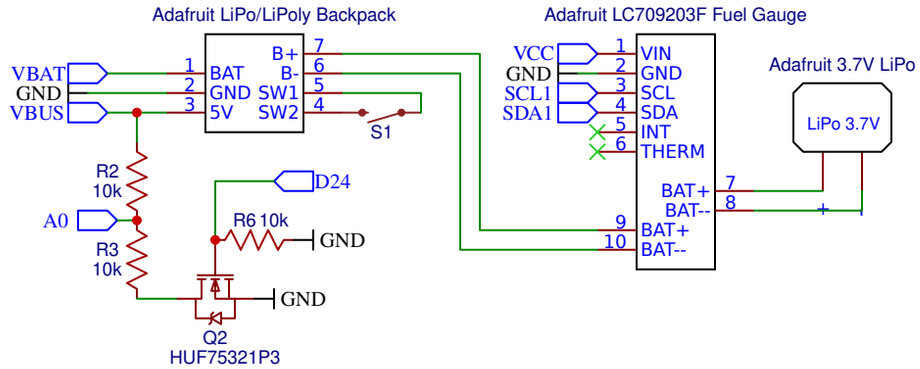

HMI

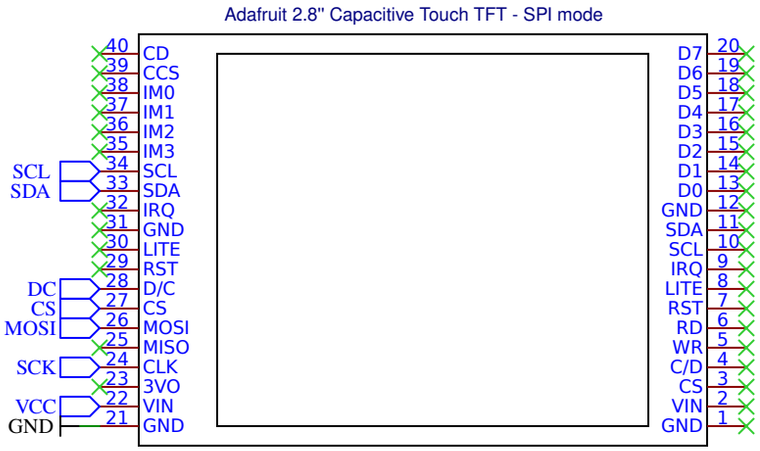

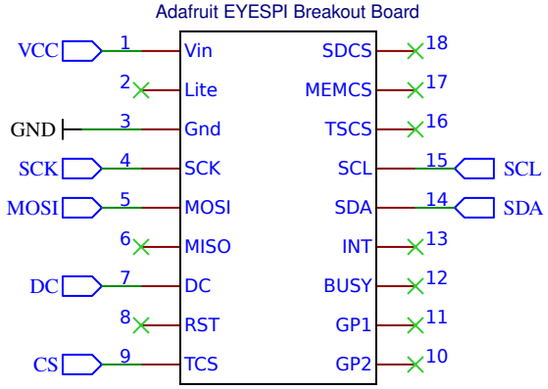

The touchscreen is connected to the breakout board over an EYESPI cable

SENSORS

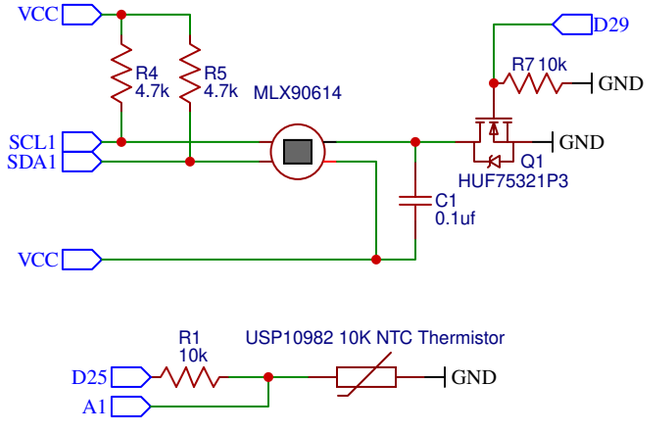

TITLE: Thermometer		REV: 1.0
	Company:	Sheet: 1/1
	Date: 2023-07-24 Drawn By: crouchingpanda	