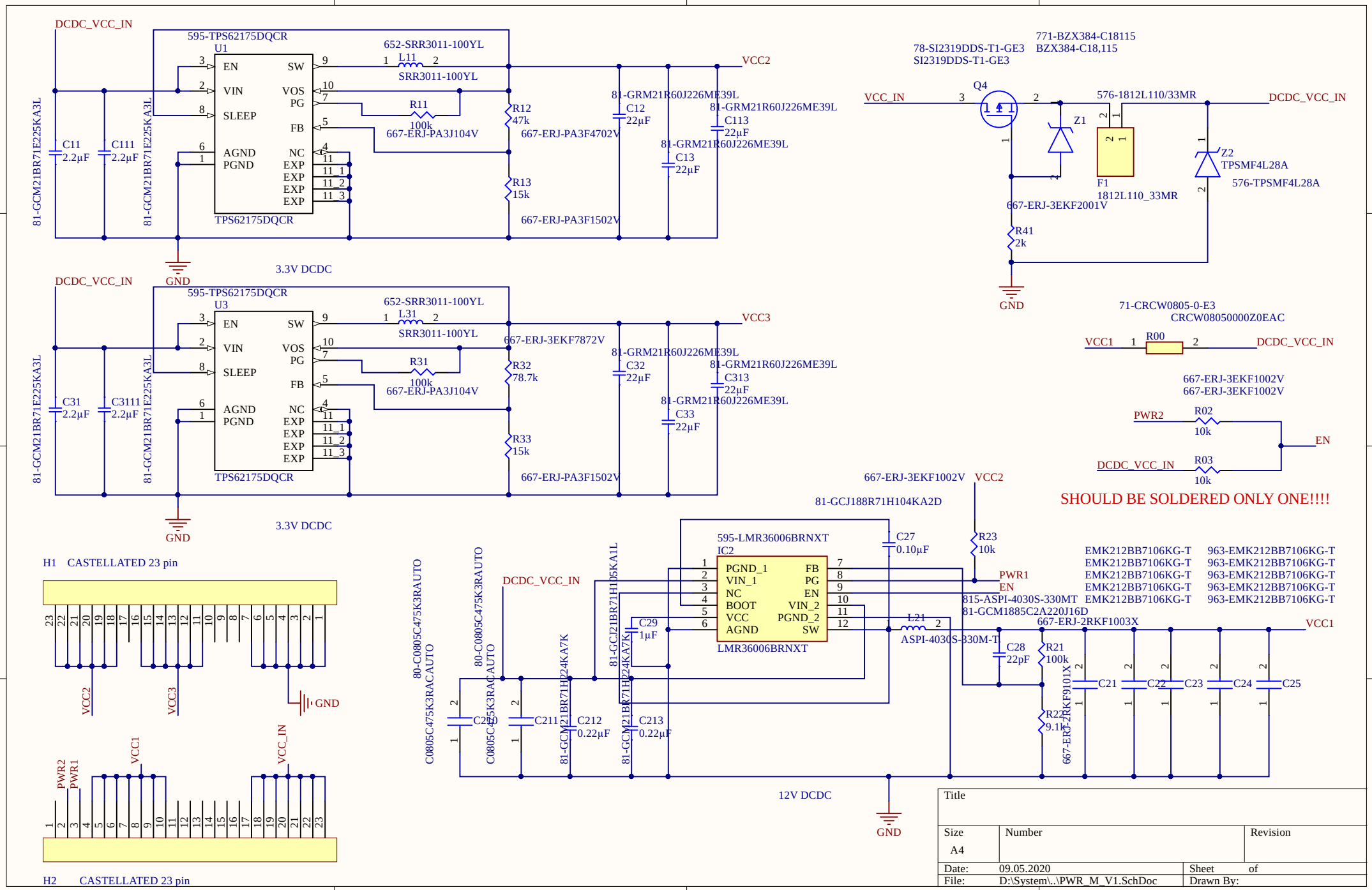
DCDC_VCC_IN
595-TPS62175DQCR
U1
652-SRR3011-100YL
L11
SRR3011-100YL
EN
VIN
SLEEP
AGND
PGND
SW
VOS
PG
FB
NC
EXP
TPS62175DQCR
R11
100k
667-ERJ-PA3J104V
R12
47k
667-ERJ-PA3F4702V
R13
15k
667-ERJ-PA3F1502V
81-GRM21R60J226ME39L
C12
22µF
C13
22µF
C113
22µF
VCC2
C11
2.2µF
C111
2.2µF
81-GCM21BR71E225KA3L
GND
3.3V DCDC
DCDC_VCC_IN
595-TPS62175DQCR
U3
652-SRR3011-100YL
L31
SRR3011-100YL
667-ERJ-3EKF7872V
R31
100k
667-ERJ-PA3J104V
R32
78.7k
R33
15k
667-ERJ-PA3F1502V
C32
22µF
C33
22µF
C313
22µF
VCC3
C31
2.2µF
C3111
2.2µF
TPS62175DQCR
GND
3.3V DCDC
78-SI2319DDS-T1-GE3
SI2319DDS-T1-GE3
771-BZX384-C18115
BZX384-C18,115
Q4
VCC_IN
576-1812L110/33MR
DCDC_VCC_IN
Z1
F1
1812L110_33MR
Z2
TPSMF4L28A
576-TPSMF4L28A
667-ERJ-3EKF2001V
R41
2k
GND
71-CRCW0805-0-E3
CRCW08050000Z0EAC
VCC1
R00
DCDC_VCC_IN
667-ERJ-3EKF1002V
667-ERJ-3EKF1002V
PWR2
R02
10k
EN
DCDC_VCC_IN
R03
10k
SHOULD BE SOLDERED ONLY ONE!!!!
667-ERJ-3EKF1002V
VCC2
81-GCJ188R71H104KA2D
595-LMR36006BRNXT
IC2
PGND_1
VIN_1
NC
BOOT
VCC
AGND
FB
PG
EN
VIN_2
PGND_2
SW
LMR36006BRNXT
C27
0.10µF
R23
10k
PWR1
EN
815-ASPI-4030S-330MT
81-GCM1885C2A220J16D
L21
ASPI-4030S-330M-T
C29
1µF
C28
22pF
R21
100k
R22
9.1k
667-ERJ-2RKF1003X
667-ERJ-2RKF9101X
VCC1
C21
C22
C23
C24
C25
EMK212BB7106KG-T
963-EMK212BB7106KG-T
80-C0805C475K3RACAUTO
C0805C475K3RACAUTO
C210
C211
C212
0.22µF
C213
0.22µF
81-GCM21BR71H224KA7K
81-GCJ21BR71H105KA1L
12V DCDC
GND
H1 CASTELLATED 23 pin
VCC2
VCC3
GND
PWR2
PWR1
VCC1
VCC_IN
H2 CASTELLATED 23 pin
Title
Size
A4
Number
Revision
Date: 09.05.2020
Sheet of
File: D:\System\..\PWR_M_V1.SchDoc
Drawn By: