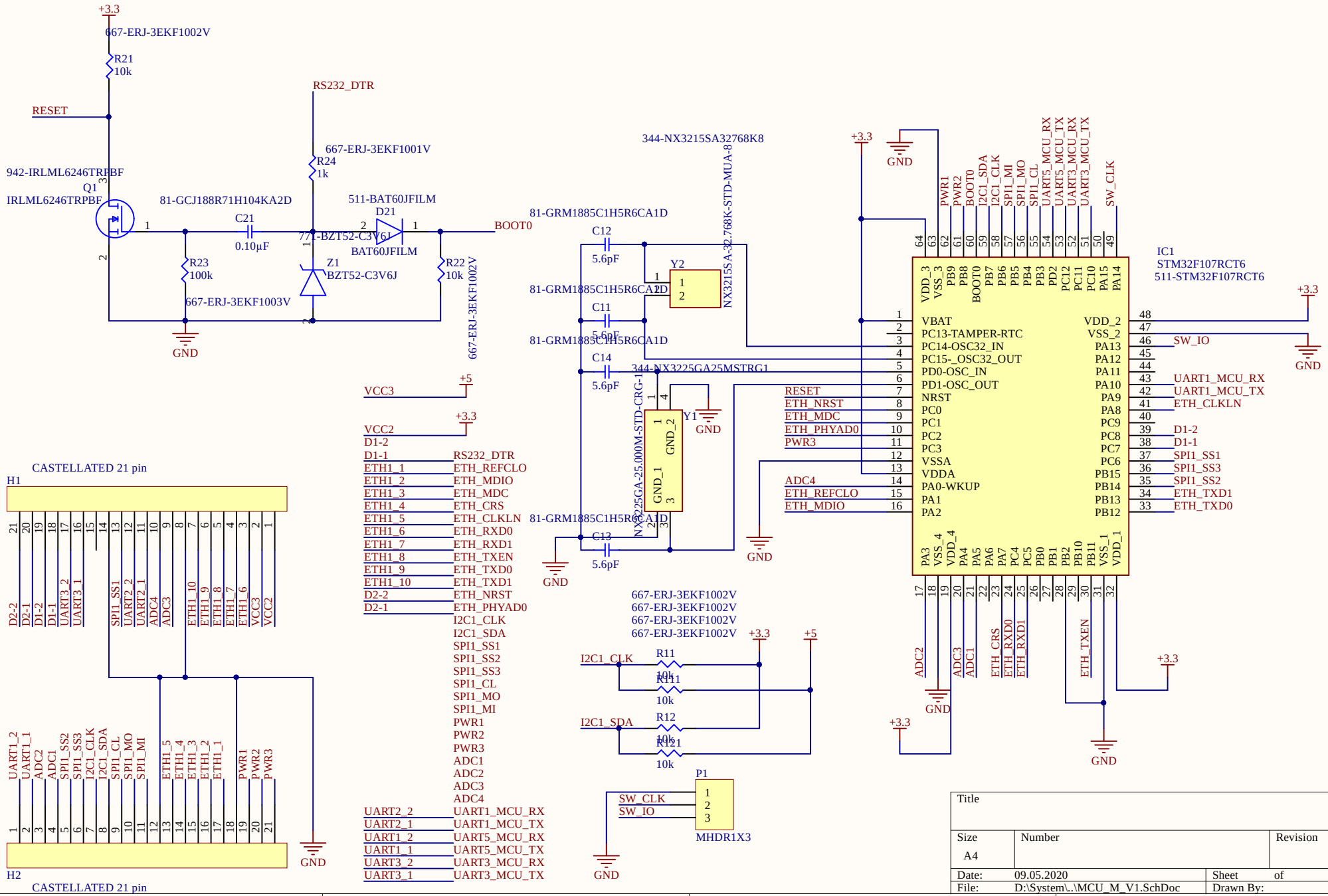
+3.3
667-ERJ-3EKF1002V
R21
10k
RESET
942-IRLML6246TRPBF
Q1
IRLML6246TRPBF
81-GCJ188R71H104KA2D
C21
0.10µF
R23
100k
667-ERJ-3EKF1003V
GND
RS232_DTR
667-ERJ-3EKF1001V
R24
1k
511-BAT60JFILM
D21
BAT60JFILM
771-BZT52-C3V6J
Z1
BZT52-C3V6J
R22
10k
667-ERJ-3EKF1002V
BOOT0
81-GRM1885C1H5R6CA1D
C12
5.6pF
C11
5.6pF
C14
5.6pF
C13
5.6pF
Y2
NX3215SA-32.768K-STD-MUA-8
344-NX3215SA32768K8
344-NX3225GA25MSTRG1
NX3225GA-25.000M-STD-CRG-1
Y1
GND_1
GND_2
VCC3
+5
VCC2
D1-2
D1-1
ETH1_1
ETH1_2
ETH1_3
ETH1_4
ETH1_5
ETH1_6
ETH1_7
ETH1_8
ETH1_9
ETH1_10
D2-2
D2-1
RS232_DTR
ETH_REFCLO
ETH_MDIO
ETH_MDC
ETH_CRS
ETH_CLKLN
ETH_RXD0
ETH_RXD1
ETH_TXEN
ETH_TXD0
ETH_TXD1
ETH_NRST
ETH_PHYAD0
I2C1_CLK
I2C1_SDA
SPI1_SS1
SPI1_SS2
SPI1_SS3
SPI1_CL
SPI1_MO
SPI1_MI
PWR1
PWR2
PWR3
ADC1
ADC2
ADC3
ADC4
UART2_2
UART2_1
UART1_2
UART1_1
UART3_2
UART3_1
UART1_MCU_RX
UART1_MCU_TX
UART5_MCU_RX
UART5_MCU_TX
UART3_MCU_RX
UART3_MCU_TX
CASTELLATED 21 pin
H1
H2
667-ERJ-3EKF1002V
667-ERJ-3EKF1002V
667-ERJ-3EKF1002V
667-ERJ-3EKF1002V
R11
10k
R12
10k
R21
10k
P1
SW_CLK
SW_IO
MHDR1X3
IC1
STM32F107RCT6
511-STM32F107RCT6
VBAT
PC13-TAMPER-RTC
PC14-OSC32_IN
PC15-_OSC32_OUT
PD0-OSC_IN
PD1-OSC_OUT
NRST
PC0
PC1
PC2
PC3
VSSA
VDDA
PA0-WKUP
PA1
PA2
VDD_2
VSS_2
PA13
PA12
PA11
PA10
PA9
PA8
PC9
PC8
PC7
PC6
PB15
PB14
PB13
PB12
PA3
VSS_4
VDD_4
PA4
PA5
PA6
PA7
PC4
PC5
PB0
PB1
PB2
PB10
PB11
VSS_1
VDD_1
VDD_3
VSS_3
PB9
PB8
BOOT0
PB7
PB6
PB5
PB4
PB3
PD2
PC12
PC11
PC10
PA15
PA14
PWR1
PWR2
BOOT0
I2C1_SDA
I2C1_CLK
SPI1_MI
SPI1_MO
SPI1_CL
UART5_MCU_RX
UART5_MCU_TX
UART3_MCU_RX
UART3_MCU_TX
SW_CLK
SW_IO
UART1_MCU_RX
UART1_MCU_TX
ETH_CLKLN
D1-2
D1-1
SPI1_SS1
SPI1_SS3
SPI1_SS2
ETH_TXD1
ETH_TXD0
ADC2
ADC3
ADC1
ETH_CRS
ETH_RXD0
ETH_RXD1
ETH_TXEN
Title
Size
A4
Number
Revision
Date: 09.05.2020
Sheet of
File: D:\System\..\MCU_M_V1.SchDoc
Drawn By: