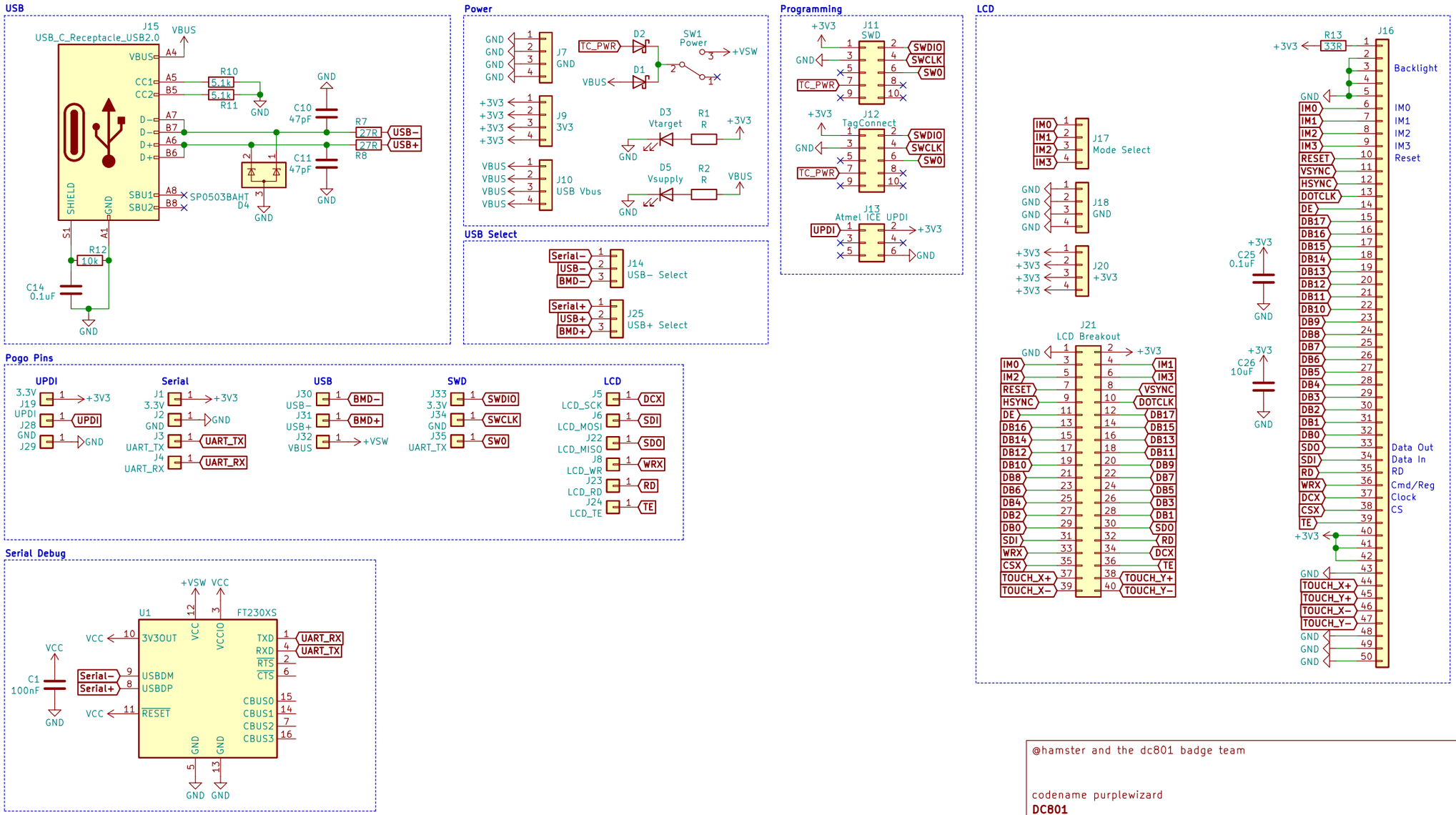

@hamster and the dc801 badge team

codename purplewizard

DC801

Sheet: /

File: purplewizard−pogo.sch

Title: DC801 Badge − BM PogoProto

Size: USLegal	Date: 2021−01−15	**Rev: 1.0**
KiCad E.D.A. kicad (5.1.9)−1		Id: 1/1