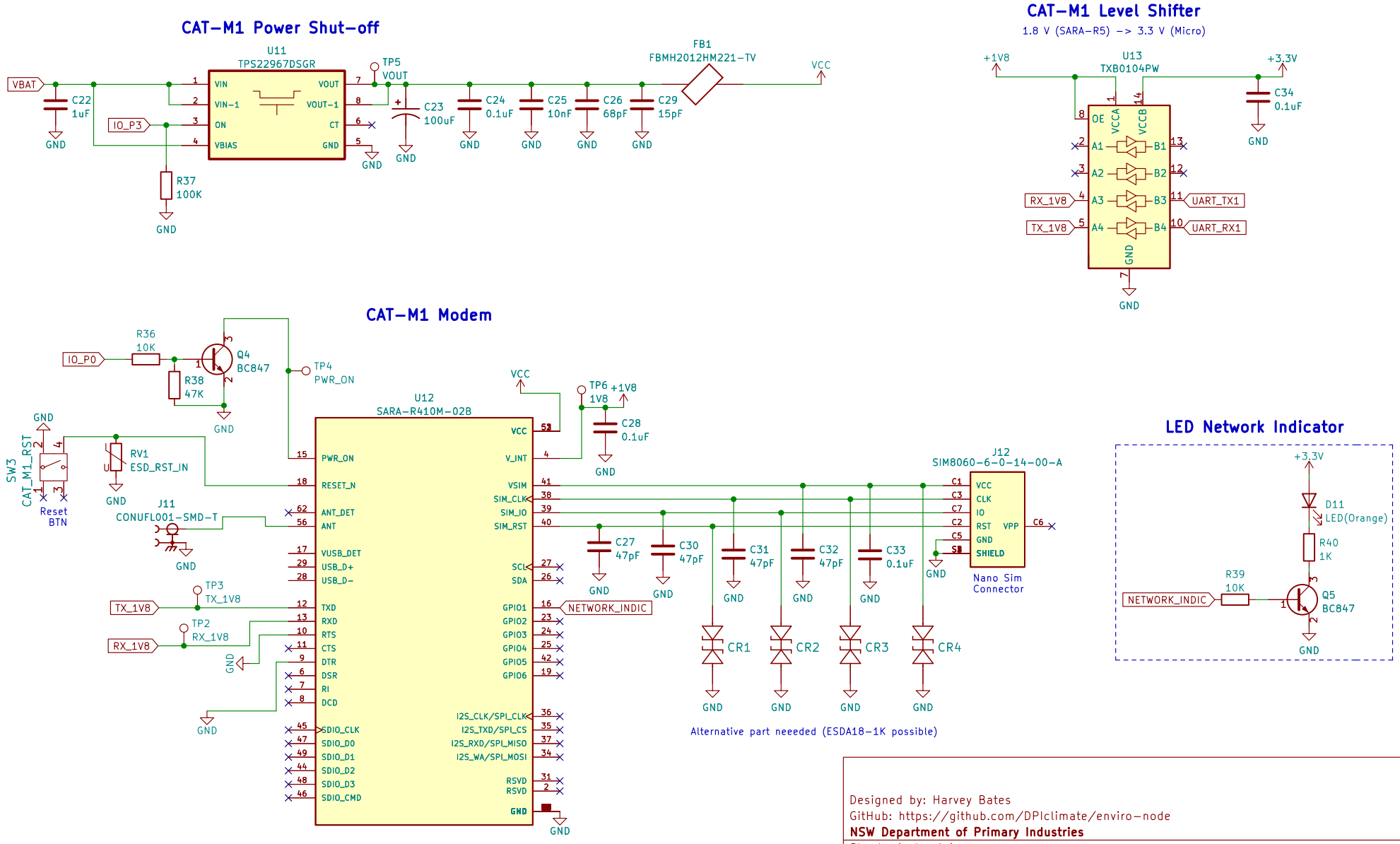

Designed by: Harvey Bates
GitHub: https://github.com/DPIclimate/enviro-node
NSW Department of Primary Industries

Sheet: /cat_m1/
File: cat_m1.kicad_sch

Title: Enviro-node

Author: (Harvey Bates)

Size: A4	Date: 2025-Nov-20	**Rev: 1.0**
KiCad E.D.A. kicad (6.0.7-1)-1		Id: 4/4