STM32MP15-DISCO

MB1272

Table of contents

Sheet 1: Project_Overview

Sheet 2: Top

Sheet 3: STM32 MPU I/Os

Sheet 4: Power MPU

Sheet 5: Power PMIC

Sheet 6: USB Host Hub &TypeC DRP

Sheet 7: Audio

Sheet 8: DSI LCD Connector

Sheet 9: HDMI

Sheet 10: GPIO & Arduino Connectors

Sheet 11: DDR3 16bits

Sheet 10: Ethernet

Sheet 11: Peripherals

Sheet 10: WLAN Bluetooth

Sheet 11: Peripherals

Legend

General comment such as function title, configuration, ...

Text to be added to silkscreen.

Warning text.

Notes to generate the board layout.

Open Platform License Agreement

The Open Platform License Agreement (“Agreement”) is a binding legal contract between you ("You") and STMicroelectronics International N.V. (“ST”), a company incorporated under the laws of the Netherlands acting for the purpose of this Agreement through its Swiss branch 39, Chemin du Champ des Filles, 1228 Plan-les-Ouates, Geneva, Switzerland.

By using the enclosed reference designs, schematics, PC board layouts, and documentation, in hardcopy or CAD tool file format (collectively, the “Reference Material”), You are agreeing to be bound by the terms and conditions of this Agreement. Do not use the Reference Material until You have read and agreed to this Agreement terms and conditions. The use of the Reference Material automatically implies the acceptance of the Agreement terms and conditions.

The complete Open Platform License Agreement can be found on www.st.com/opla.

U_Top
Top.SchDoc

Title: **Project_Overview**		
Project: **STM32MP15-DISCO**		
Variant: DK1		
Revision: C-03		Reference: MB1272
Size: A4	Date: 20-09-2022	Sheet: 1 of 15

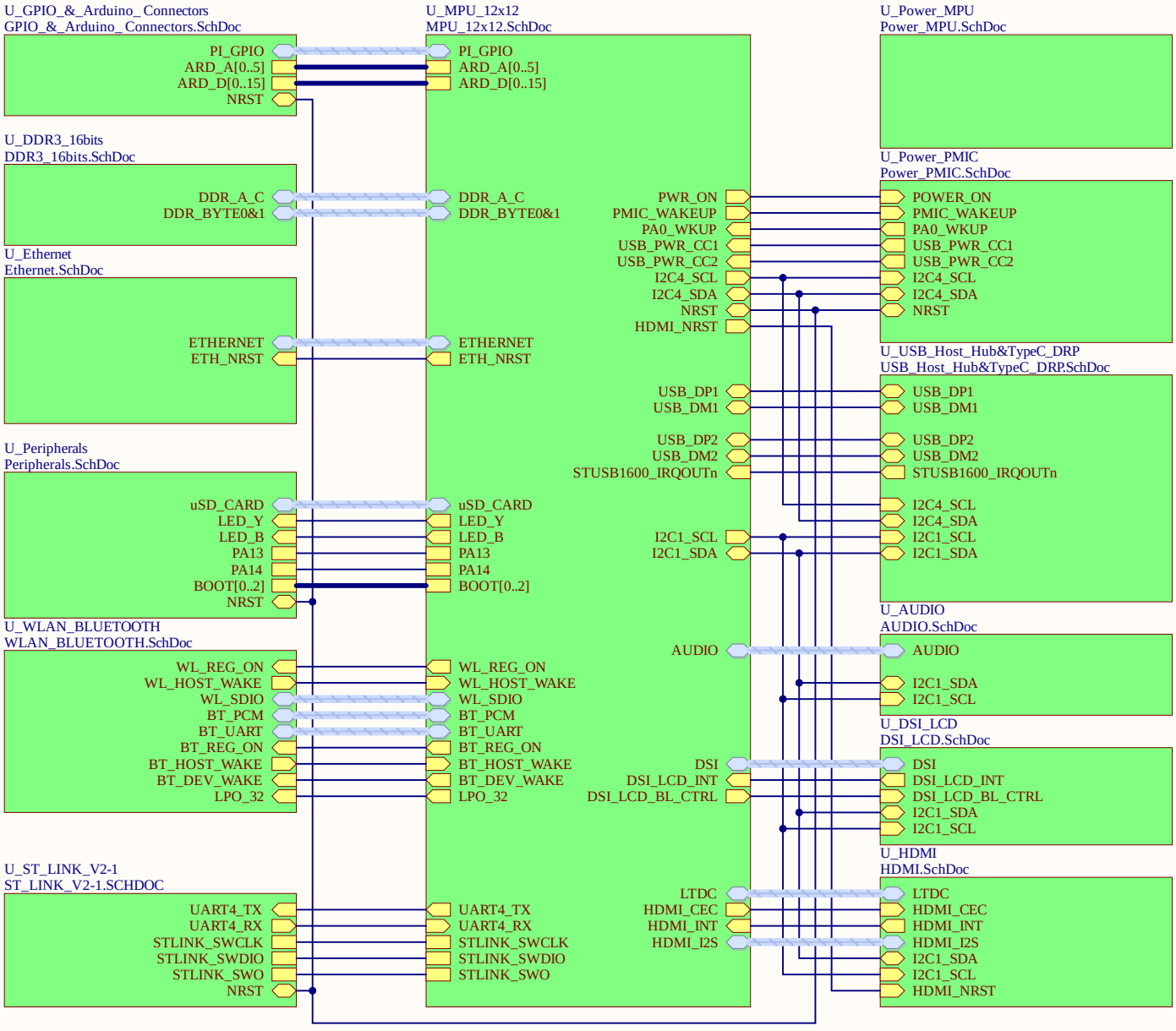

HW1302

BOARD CPN

Board CPN

HW1303

BOARD REF

MBxxxxy-zz syywwxxxxx

Title: **Top**		
Project: **STM32MP15-DISCO**		
Variant: DK1		
Revision: C-03		Reference: MB1272
Size: A4	Date: 20-09-2022	Sheet: 2 of 15

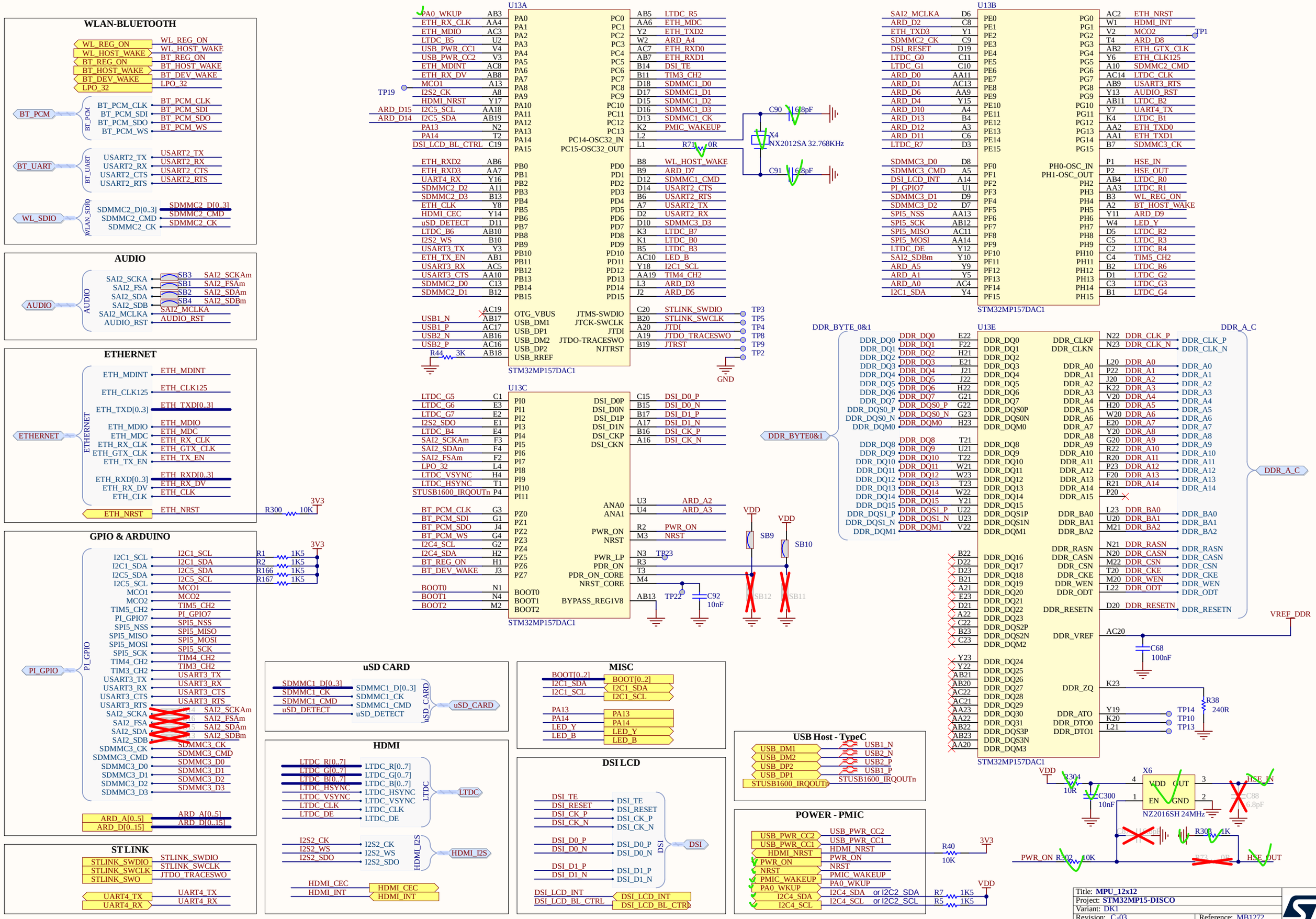

Title: MPU_12x12	
Project: STM32MP15-DISCO	
Variant: DK1	
Revision: C-03	Reference: MB1272
Size: A3	Date: 20-09-2022
Sheet: 3 of 15	

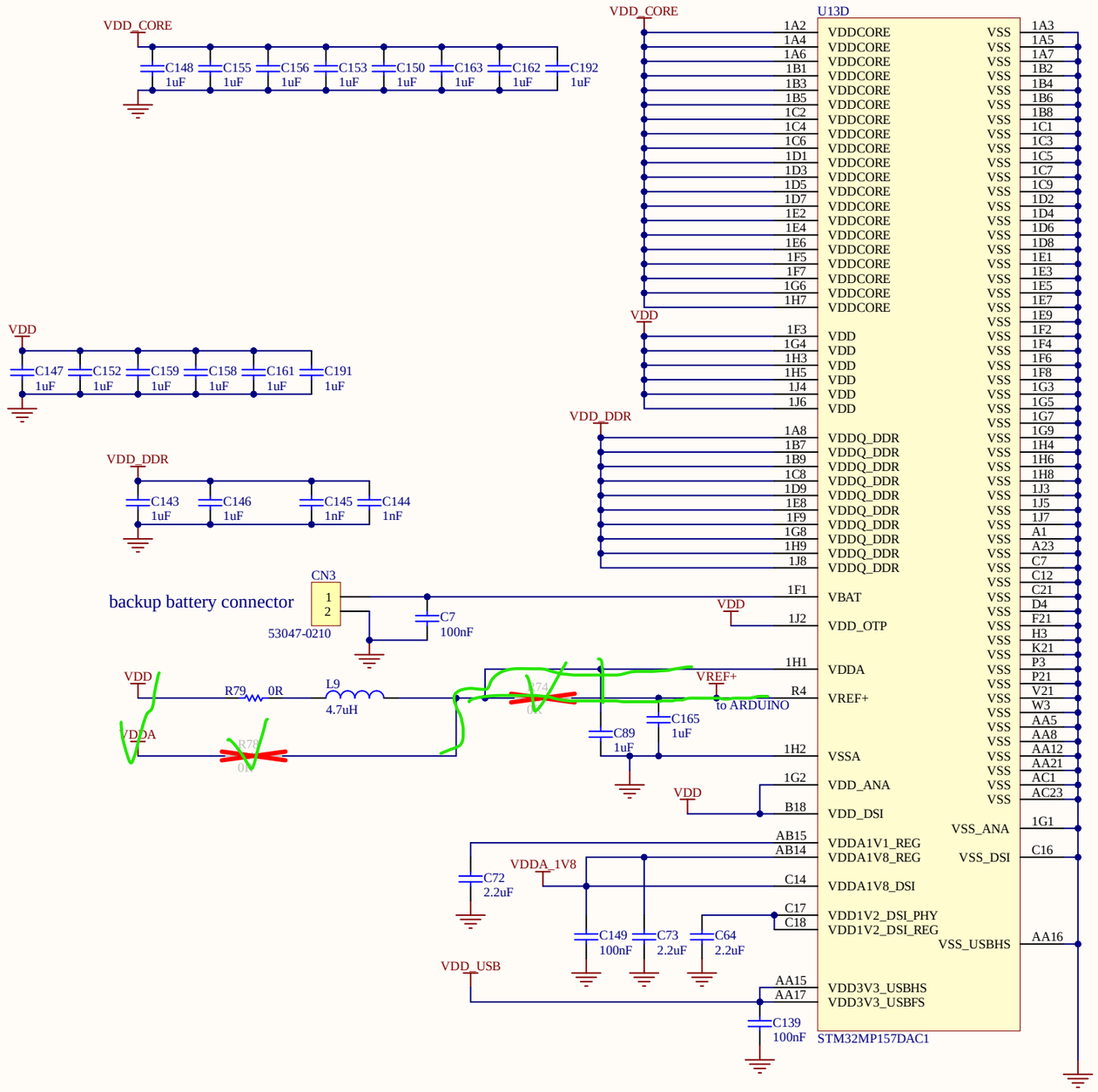

Title: **Power_MPU**		
Project: **STM32MP15-DISCO**		
Variant: DK1		
Revision: C-03		Reference: MB1272
Size: A3	Date: 20-09-2022	Sheet: 4 of 15

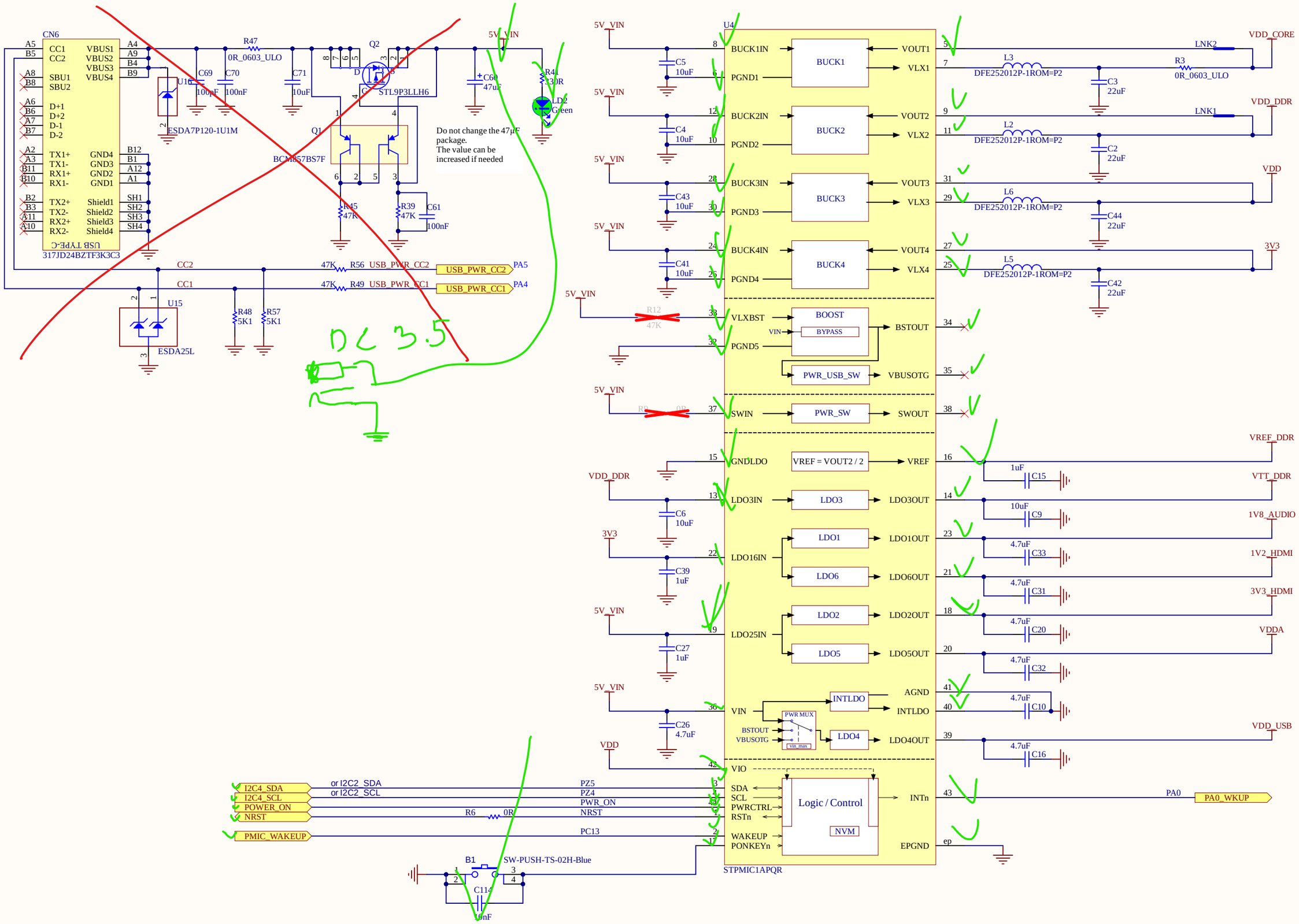

Title: **Power_PMIC**		
Project: **STM32MP15-DISCO**		
Variant: DK1		
Revision: C-03		Reference: MB1272
Size: A3	Date: 20-09-2022	Sheet: 5 of 15

USB_HOST_HUBx4

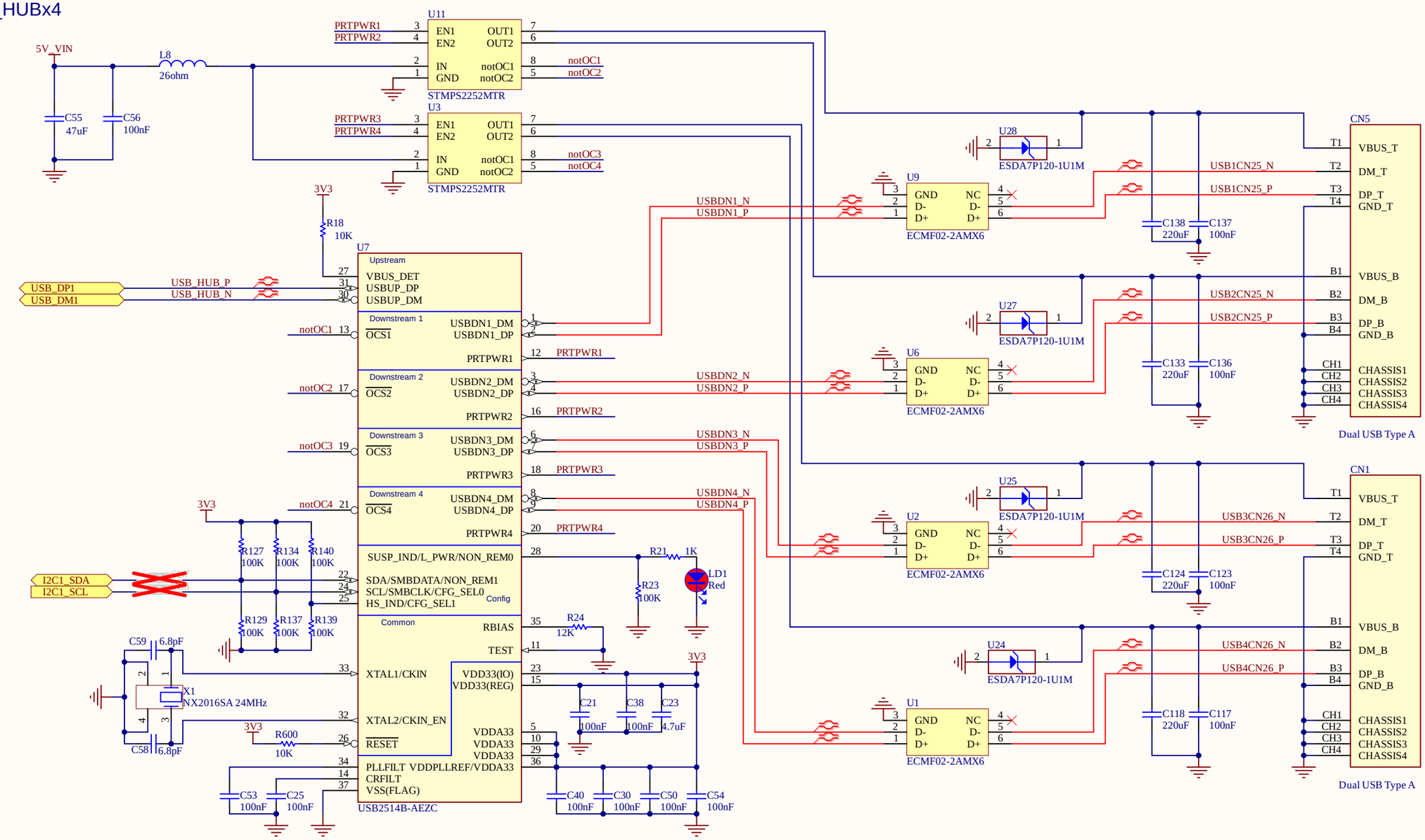

USB_TYPE_C_DRP

Source only

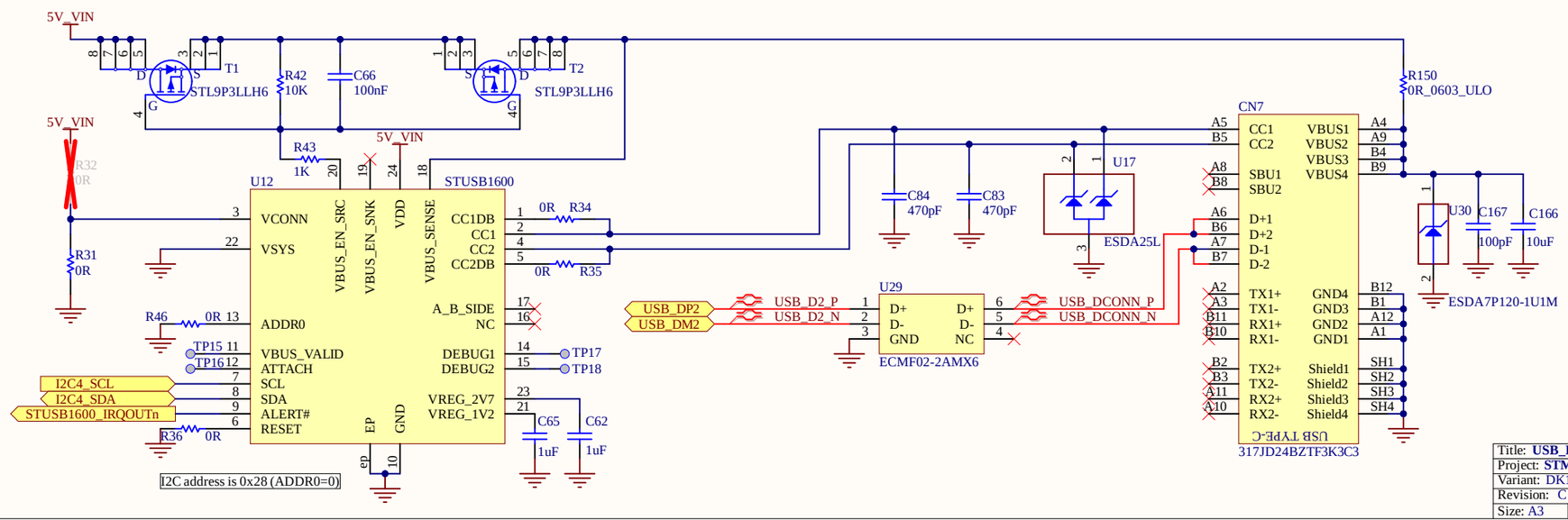

Title: USB_Host_Hub&TypeC_DRP		
Project: STM32MP15-DISCO		
Variant: DK1		
Revision: C-03		Reference: MB1272
Size: A3	Date: 20-09-2022	Sheet: 6 of 15

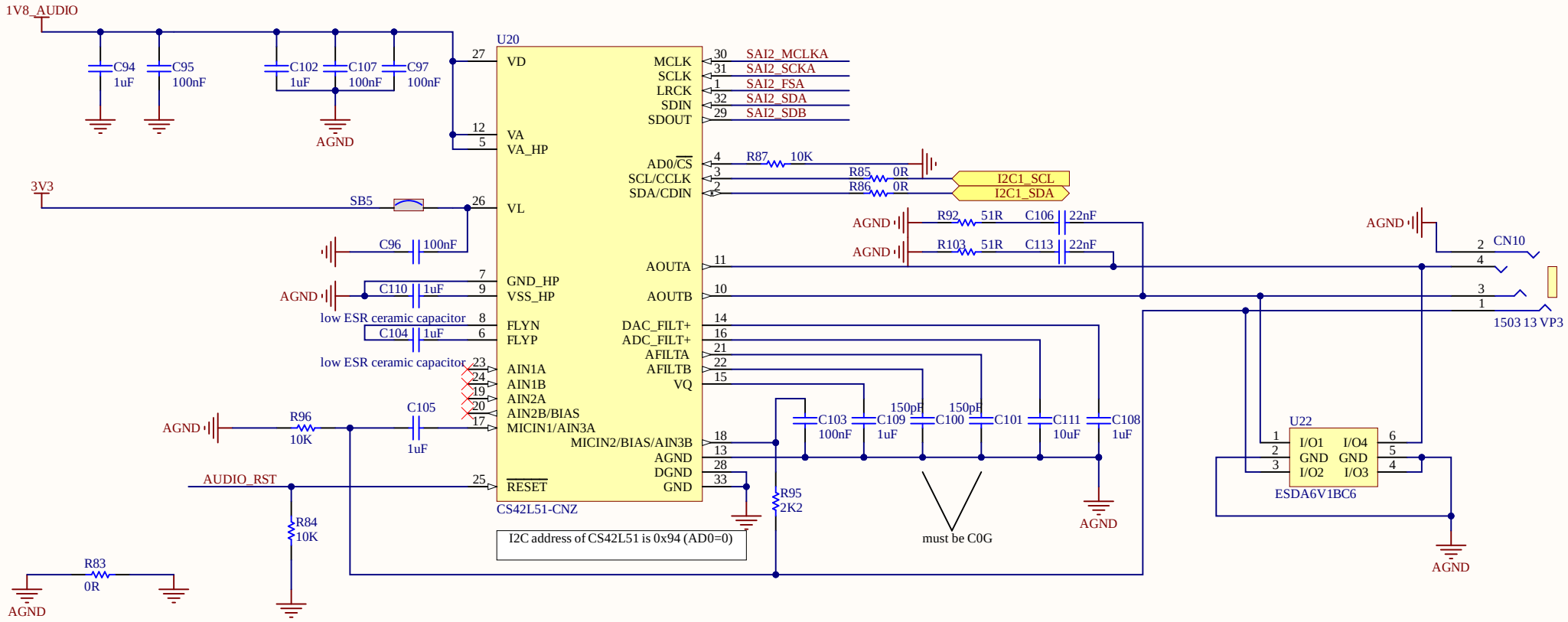

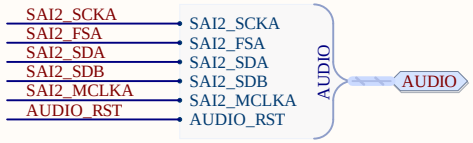

Title: **AUDIO**		
Project: **STM32MP15-DISCO**		
Variant: DK1		
Revision: C-03		Reference: MB1272
Size: A4	Date: 20-09-2022	Sheet: 7 of 15

MB1407 I2C Address : 0101 0100

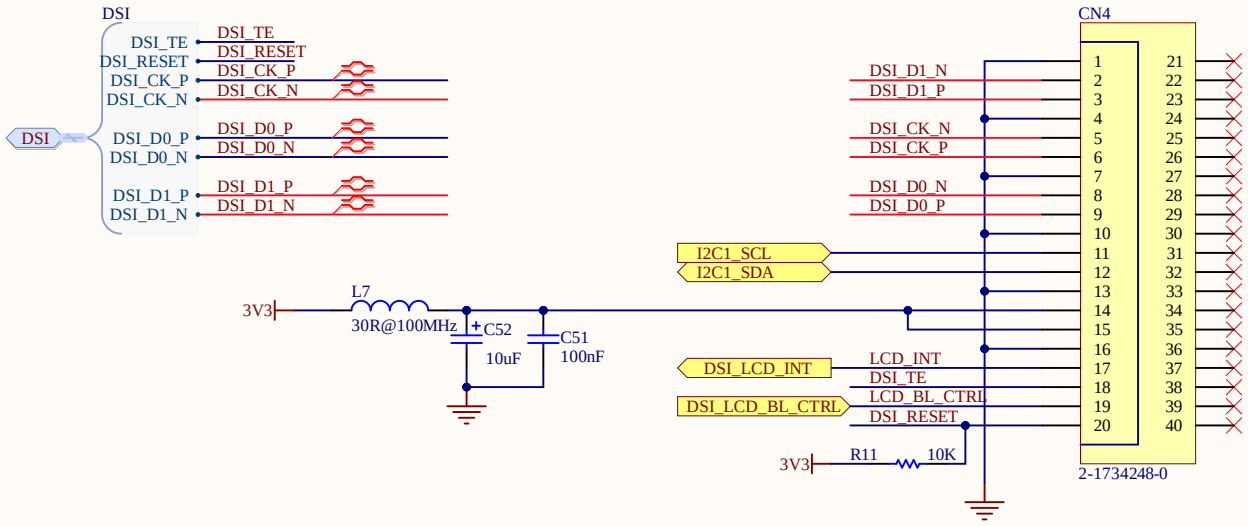

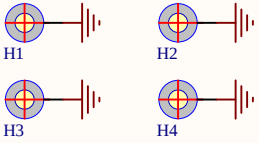

Title: **DSI_LCD_connector**		
Project: **STM32MP15-DISCO**		
Variant: DK1		
Revision: C-03		Reference: MB1272
Size: A4	Date: 20-09-2022	Sheet: 8 of 15

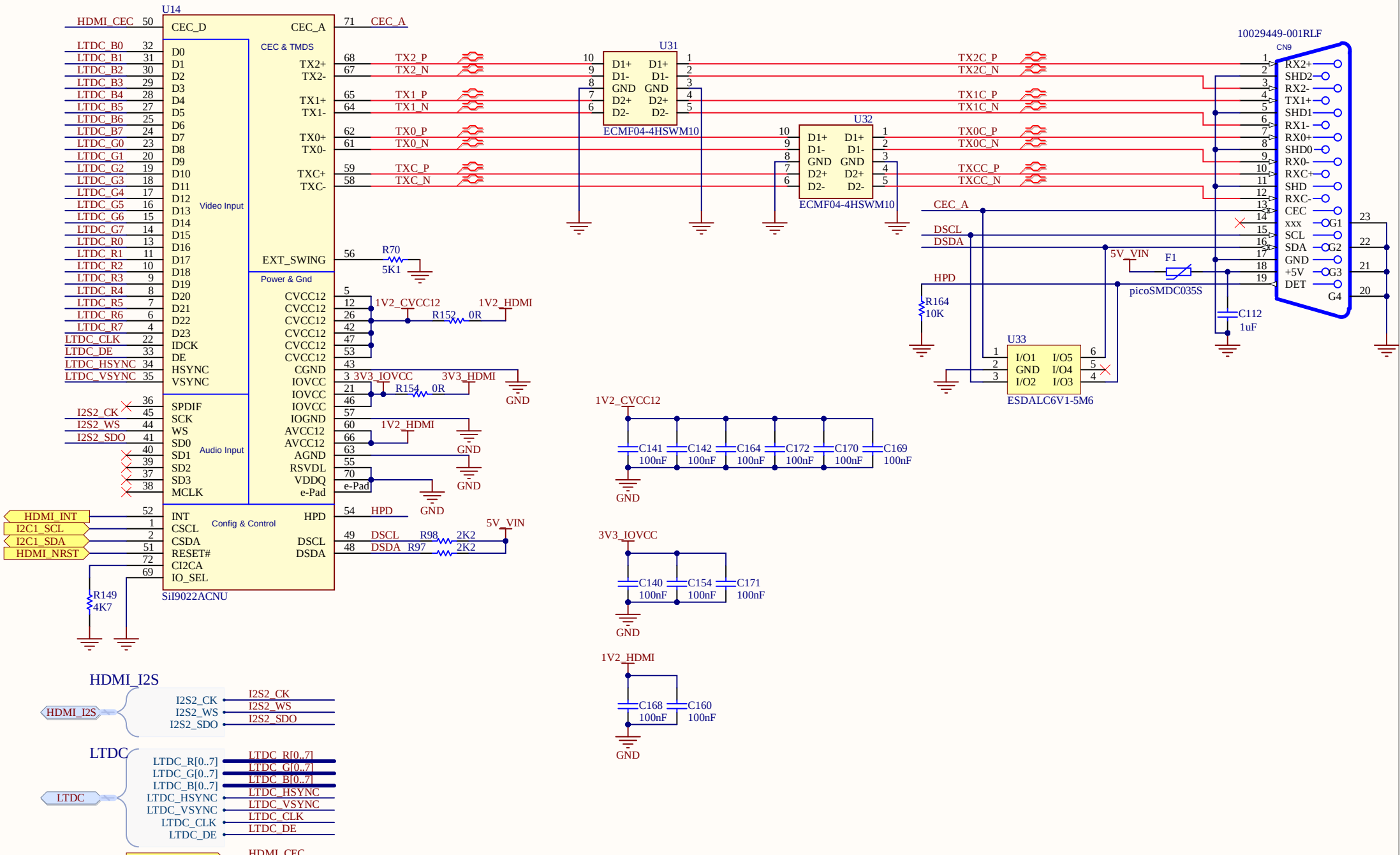

Title: **HDMI**	
Project: **STM32MP15-DISCO**	
Variant: DK1	
Revision: C-03	Reference: MB1272
Size: A4 Date: 20-09-2022	Sheet: 9 of 15

ARDUINO UNO connector

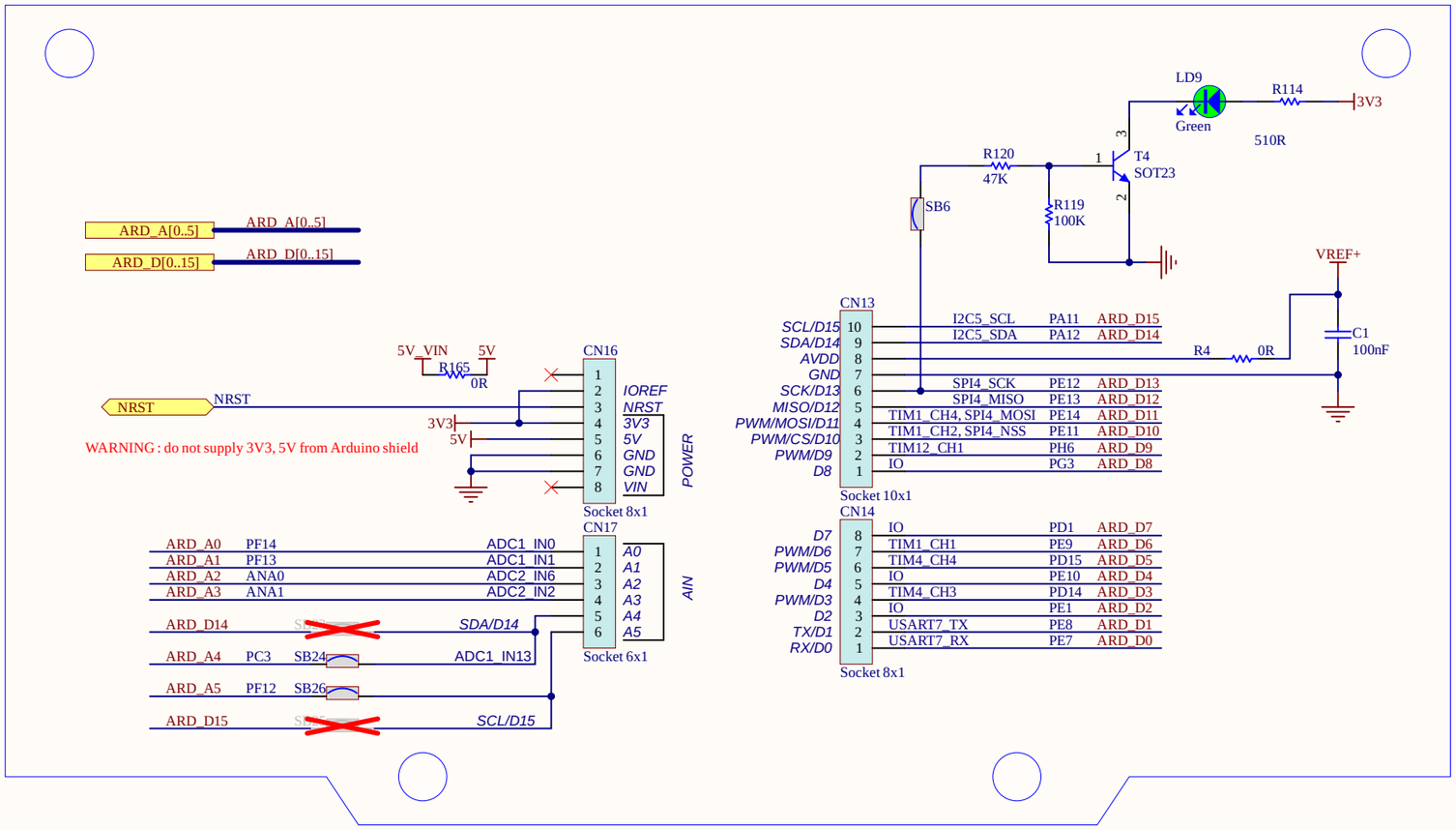

GPIO EXPANSION

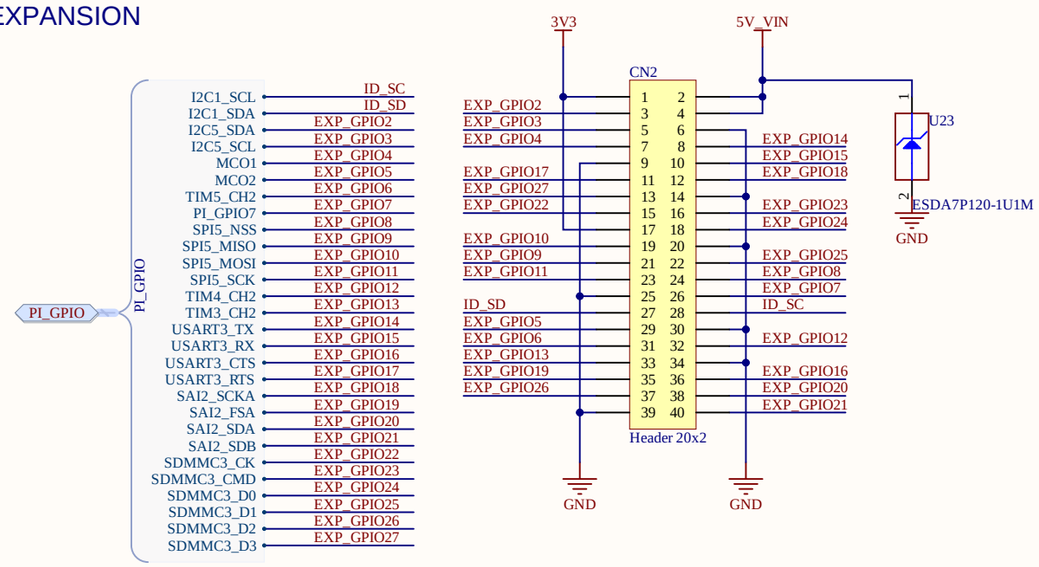

Title: **GPIO_&_Arduino_ Connectors**		
Project: **STM32MP15-DISCO**		
Variant: DK1		
Revision: C-03		Reference: MB1272
Size: A3	Date: 20-09-2022	Sheet: 10 of 15

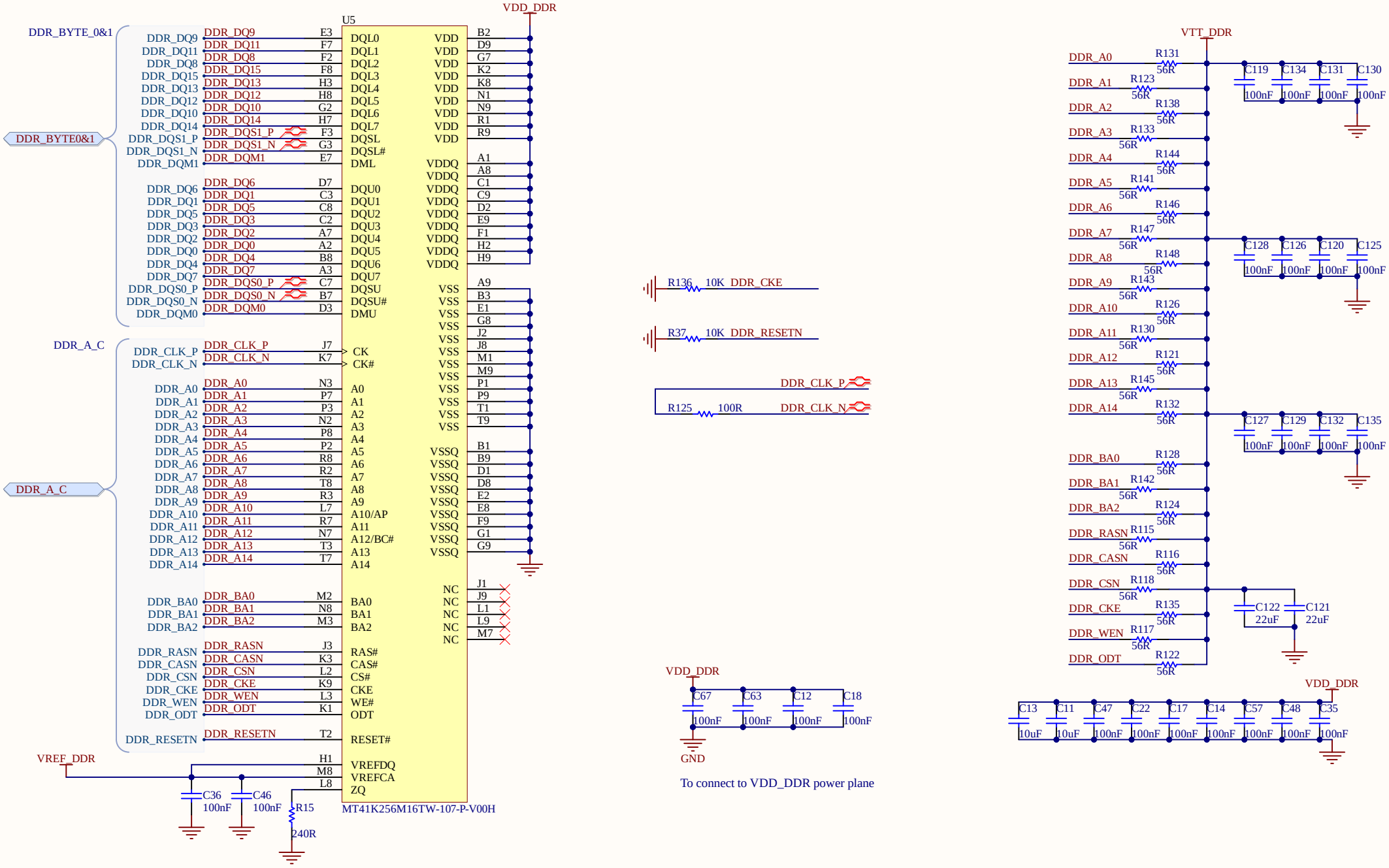

Title: **DDR3L_16bits**		
Project: **STM32MP15-DISCO**		
Variant: DK1		
Revision: C-03		Reference: MB1272
Size: A4	Date: 20-09-2022	Sheet: 11 of 15

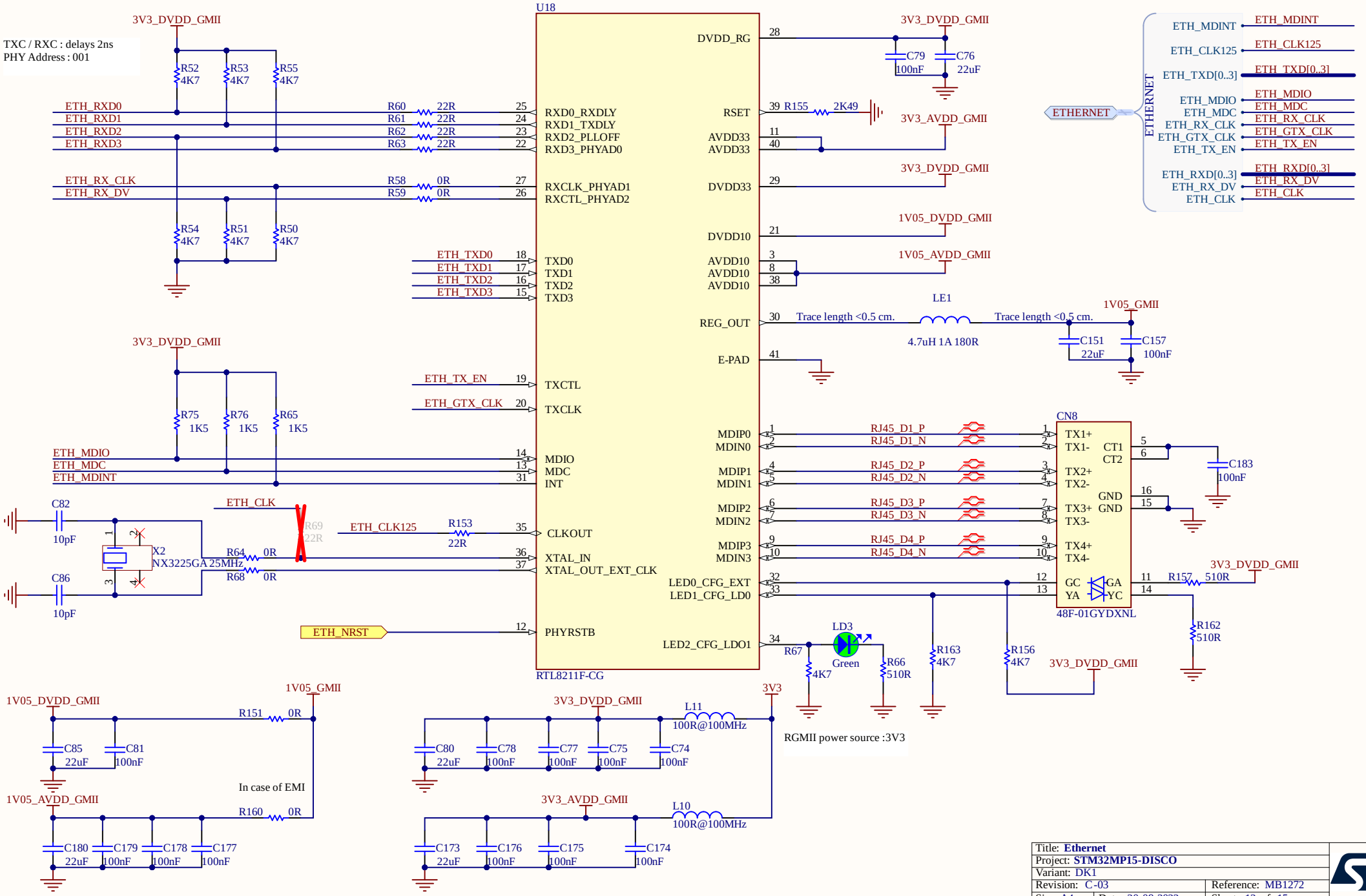
U18
RTL8211F-CG
TXC / RXC : delays 2ns
PHY Address : 001
3V3_DVDD_GMII
R52 4K7
R53 4K7
R55 4K7
R54 4K7
R51 4K7
R50 4K7
ETH_RXD0
ETH_RXD1
ETH_RXD2
ETH_RXD3
ETH_RX_CLK
ETH_RX_DV
R60 22R
R61 22R
R62 22R
R63 22R
R58 0R
R59 0R
RXD0_RXDLY
RXD1_TXDLY
RXD2_PLLOFF
RXD3_PHYAD0
RXCLK_PHYAD1
RXCTL_PHYAD2
ETH_TXD0
ETH_TXD1
ETH_TXD2
ETH_TXD3
TXD0
TXD1
TXD2
TXD3
ETH_TX_EN
ETH_GTX_CLK
TXCTL
TXCLK
R75 1K5
R76 1K5
R65 1K5
ETH_MDIO
ETH_MDC
ETH_MDINT
MDIO
MDC
INT
C82 10pF
C86 10pF
X2 NX3225GA 25MHz
ETH_CLK
R69 22R
ETH_CLK125
R153 22R
R64 0R
R68 0R
CLKOUT
XTAL_IN
XTAL_OUT_EXT_CLK
ETH_NRST
PHYRSTB
DVDD_RG
RSET
AVDD33
DVDD33
DVDD10
AVDD10
REG_OUT
E-PAD
MDIP0
MDIN0
MDIP1
MDIN1
MDIP2
MDIN2
MDIP3
MDIN3
LED0_CFG_EXT
LED1_CFG_LD0
LED2_CFG_LDO1
C79 100nF
C76 22uF
R155 2K49
3V3_AVDD_GMII
1V05_DVDD_GMII
1V05_AVDD_GMII
LE1
Trace length <0.5 cm.
4.7uH 1A 180R
1V05_GMII
C151 22uF
C157 100nF
RJ45_D1_P
RJ45_D1_N
RJ45_D2_P
RJ45_D2_N
RJ45_D3_P
RJ45_D3_N
RJ45_D4_P
RJ45_D4_N
CN8
TX1+
TX1-
CT1
CT2
TX2+
TX2-
GND
TX3+
TX3-
TX4+
TX4-
GC
YA
GA
YC
48F-01GYDXNL
C183 100nF
R157 510R
R162 510R
LD3 Green
R67 4K7
R66 510R
R163 4K7
R156 4K7
RGMII power source :3V3
ETHERNET
ETH_MDINT
ETH_CLK125
ETH_TXD[0..3]
ETH_MDIO
ETH_MDC
ETH_RX_CLK
ETH_GTX_CLK
ETH_TX_EN
ETH_RXD[0..3]
ETH_RX_DV
ETH_CLK
1V05_GMII
R151 0R
R160 0R
In case of EMI
C85 22uF
C81 100nF
C180 22uF
C179 100nF
C178 100nF
C177 100nF
3V3
L11 100R@100MHz
L10 100R@100MHz
C80 22uF
C78 100nF
C77 100nF
C75 100nF
C74 100nF
C173 22uF
C176 100nF
C175 100nF
C174 100nF
Title: Ethernet
Project: STM32MP15-DISCO
Variant: DK1
Revision: C-03
Reference: MB1272
Size: A4
Date: 20-09-2022
Sheet: 12 of 15

RESET BUTTON

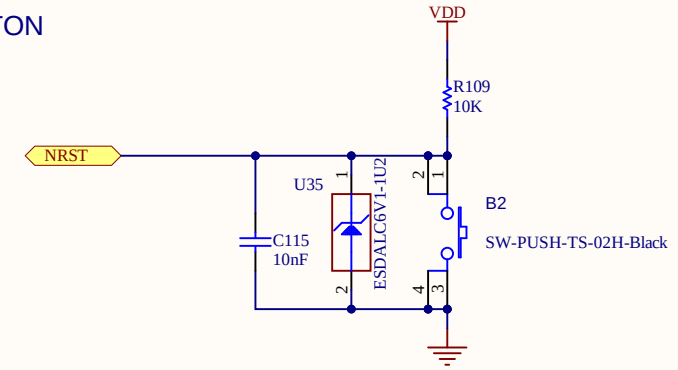

BOOT MODE

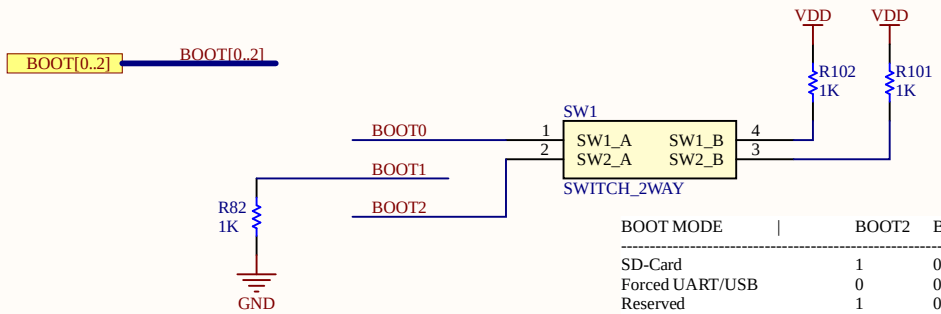

BOOT MODE	BOOT2	BOOT1	BOOT0
SD-Card	1	0	1
Forced UART/USB	0	0	0
Reserved	1	0	0

MICRO SD CARD

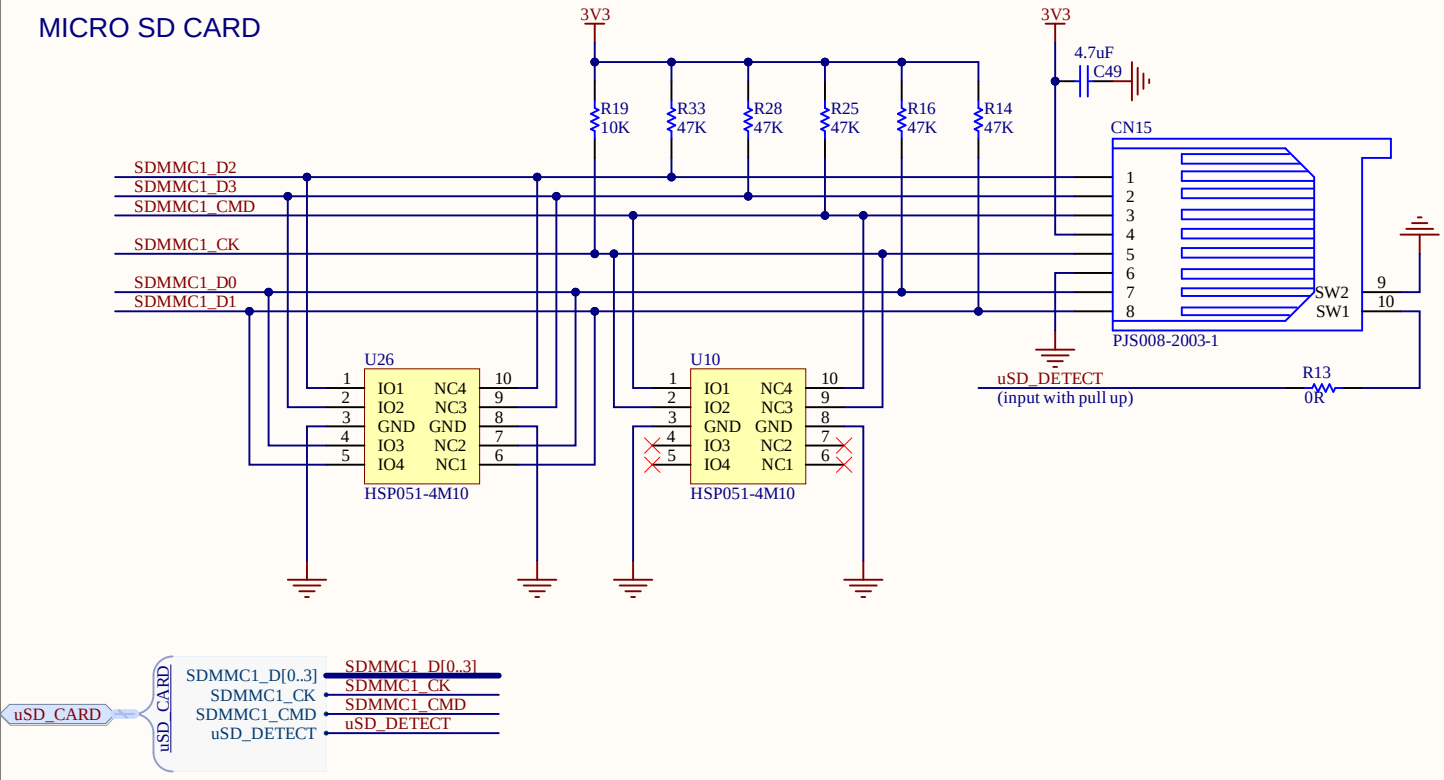

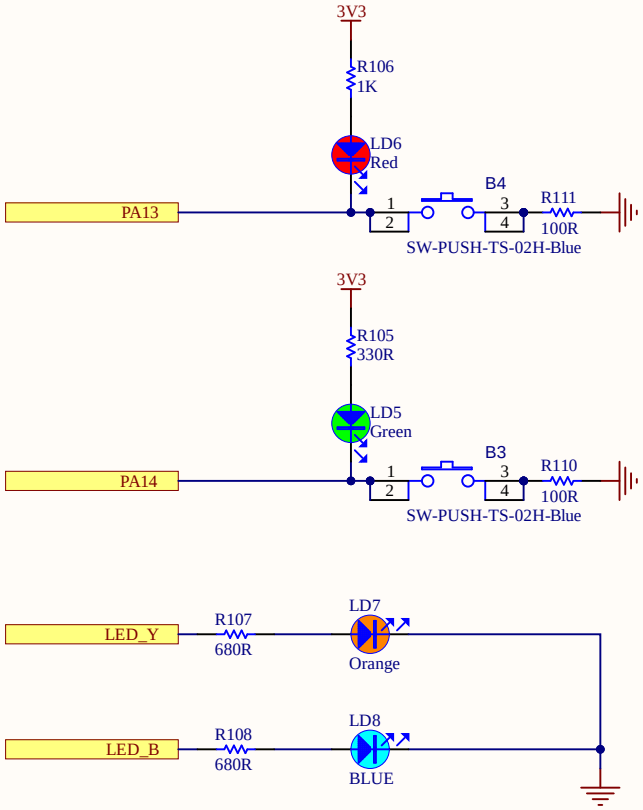

Title: **Peripherals**		
Project: **STM32MP15-DISCO**		
Variant: DK1		
Revision: C-03		Reference: MB1272
Size: A4	Date: 20-09-2022	Sheet: 13 of 15

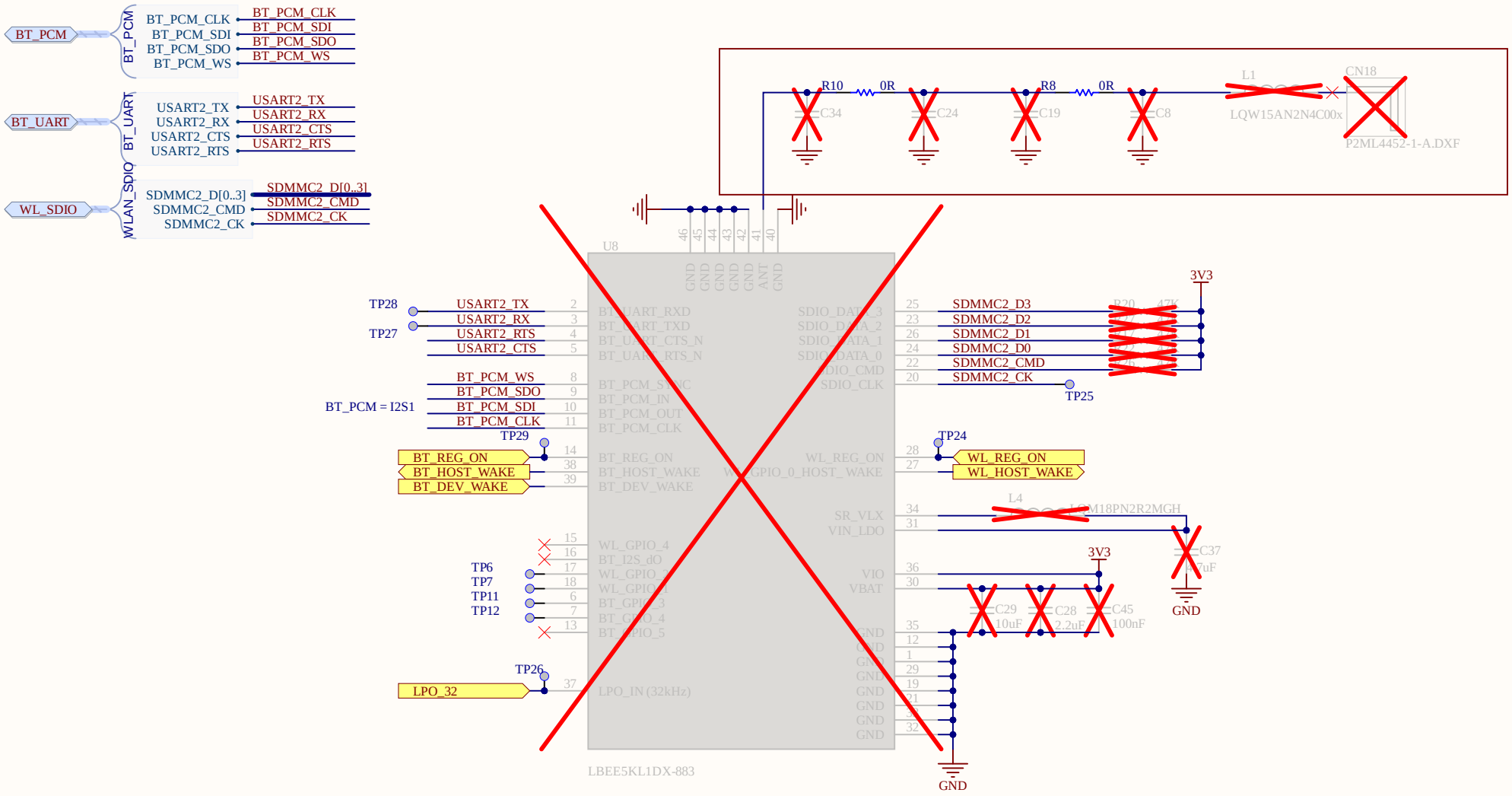

Title: **WLAN_BLUETOOTH**		
Project: **STM32MP15-DISCO**		
Variant: DK1		
Revision: C-03		Reference: MB1272
Size: A4	Date: 20-09-2022	Sheet: 14 of 15

ST-LINK MCU

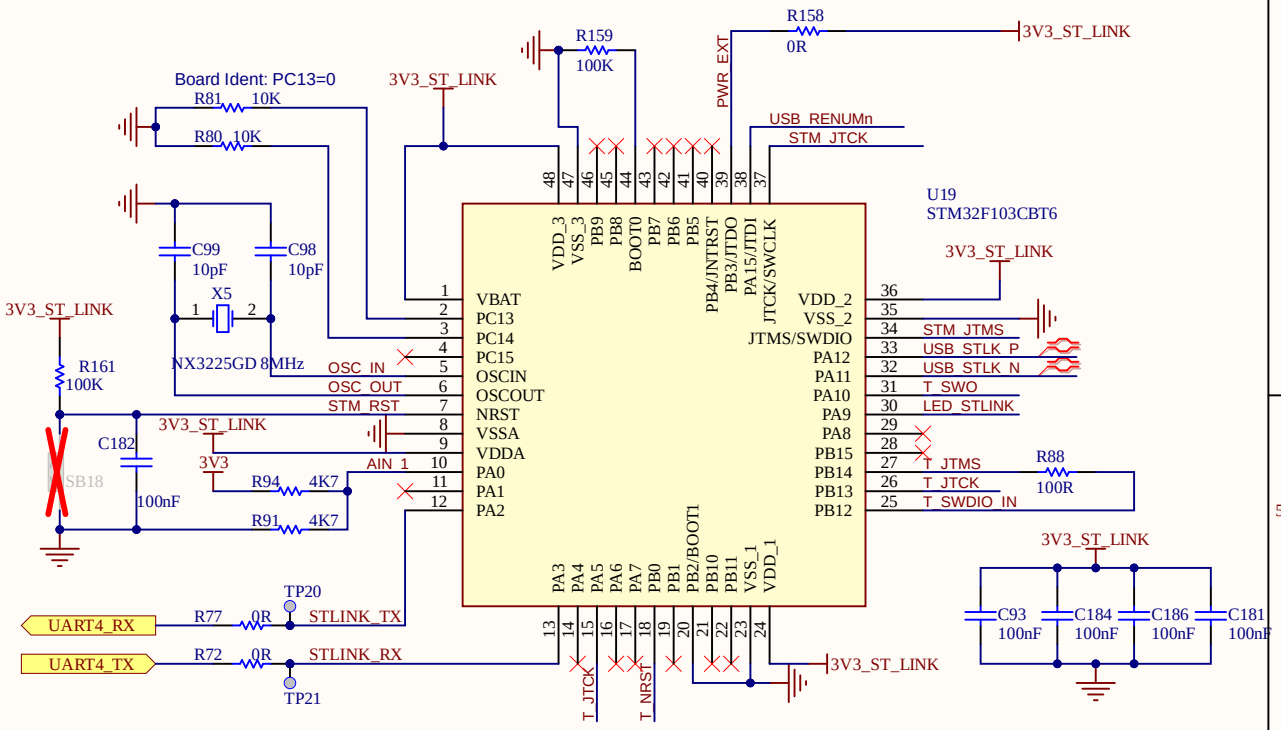

SWD INTERFACE

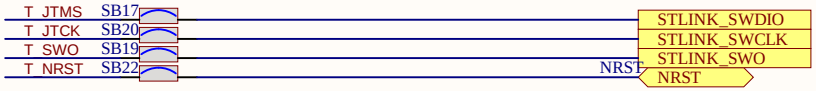

ST-LINK POWER 3V3 / 150mA

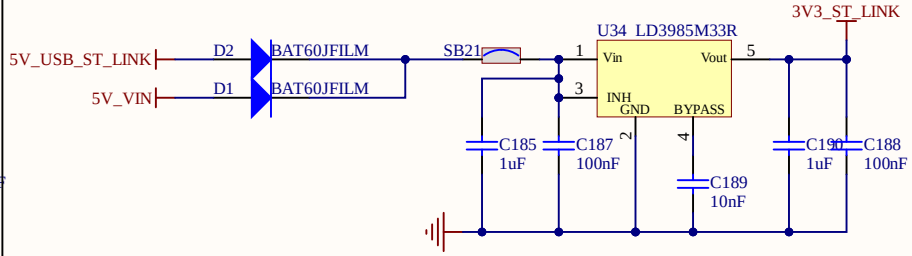

ST-LINK USB CONNECTOR

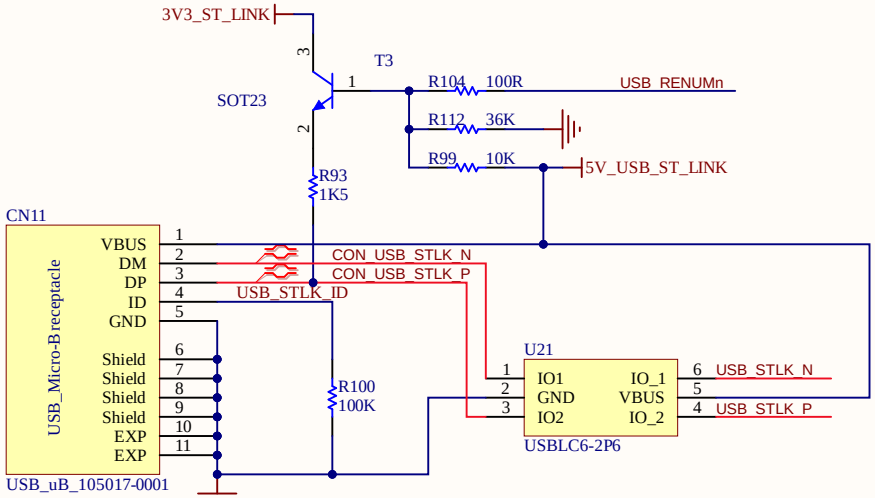

ESD PROTECTION SHOULD BE CLOSE TO THE CONNECTOR

STLINK_LED

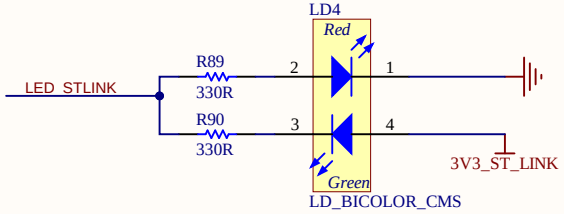

ST-LINK DFU

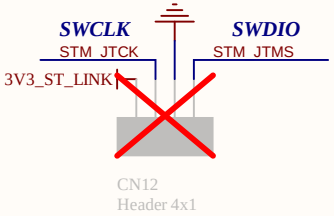

Must be on a border of the PCB.

Title: **ST-LINK/V2-1 with support of SWD only**		
Project: **STM32MP15-DISCO**		
Variant: DK1		
Revision: C-03		Reference: MB1272
Size: A4	Date: 20-09-2022	Sheet: 15 of 15