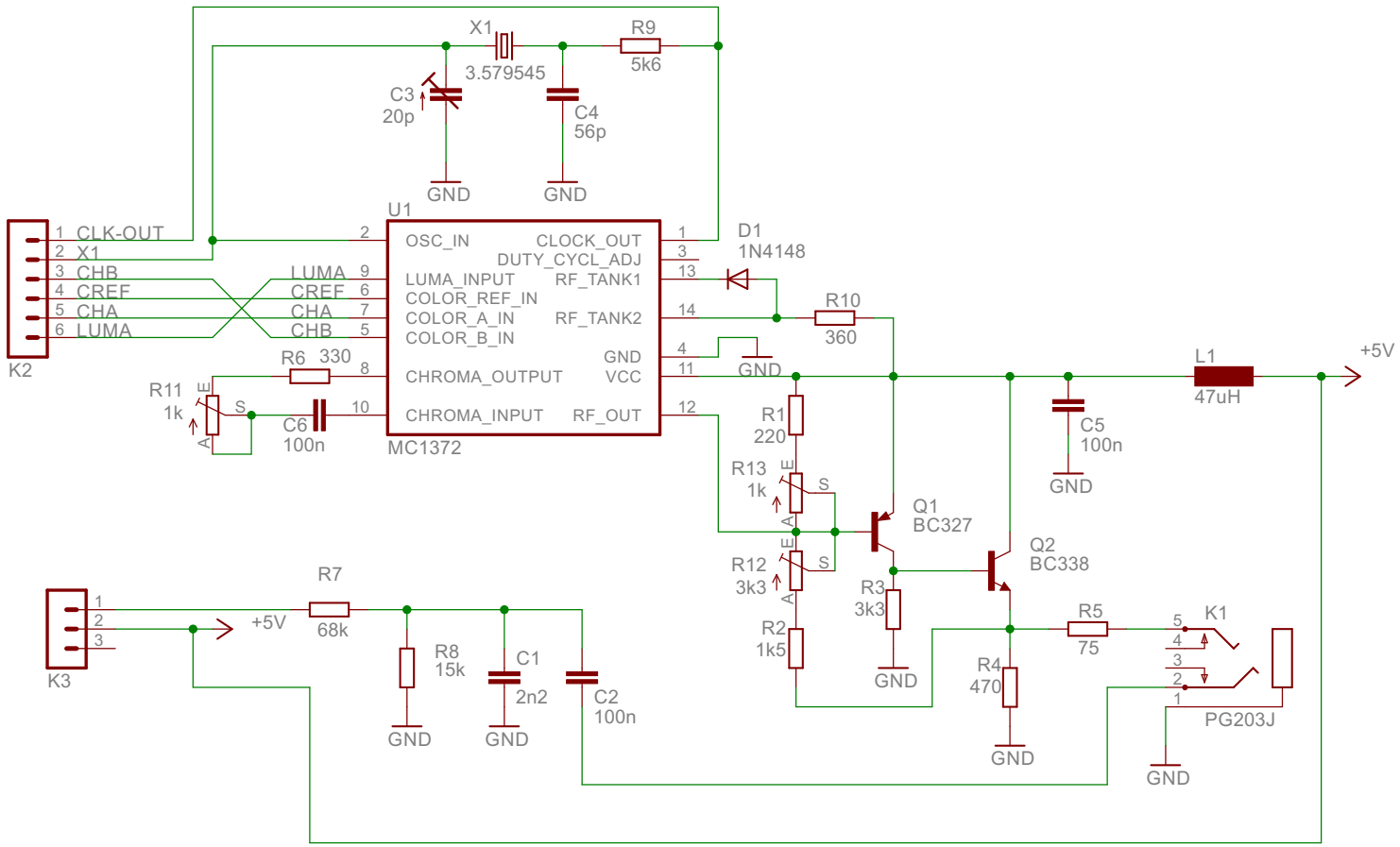

TRS-80 MC-10 Modulator Replacement

Danjovic 2021

MC-10 Mod A_V	
04/10/2021 13:26:07	
Sheet: 1/1	C