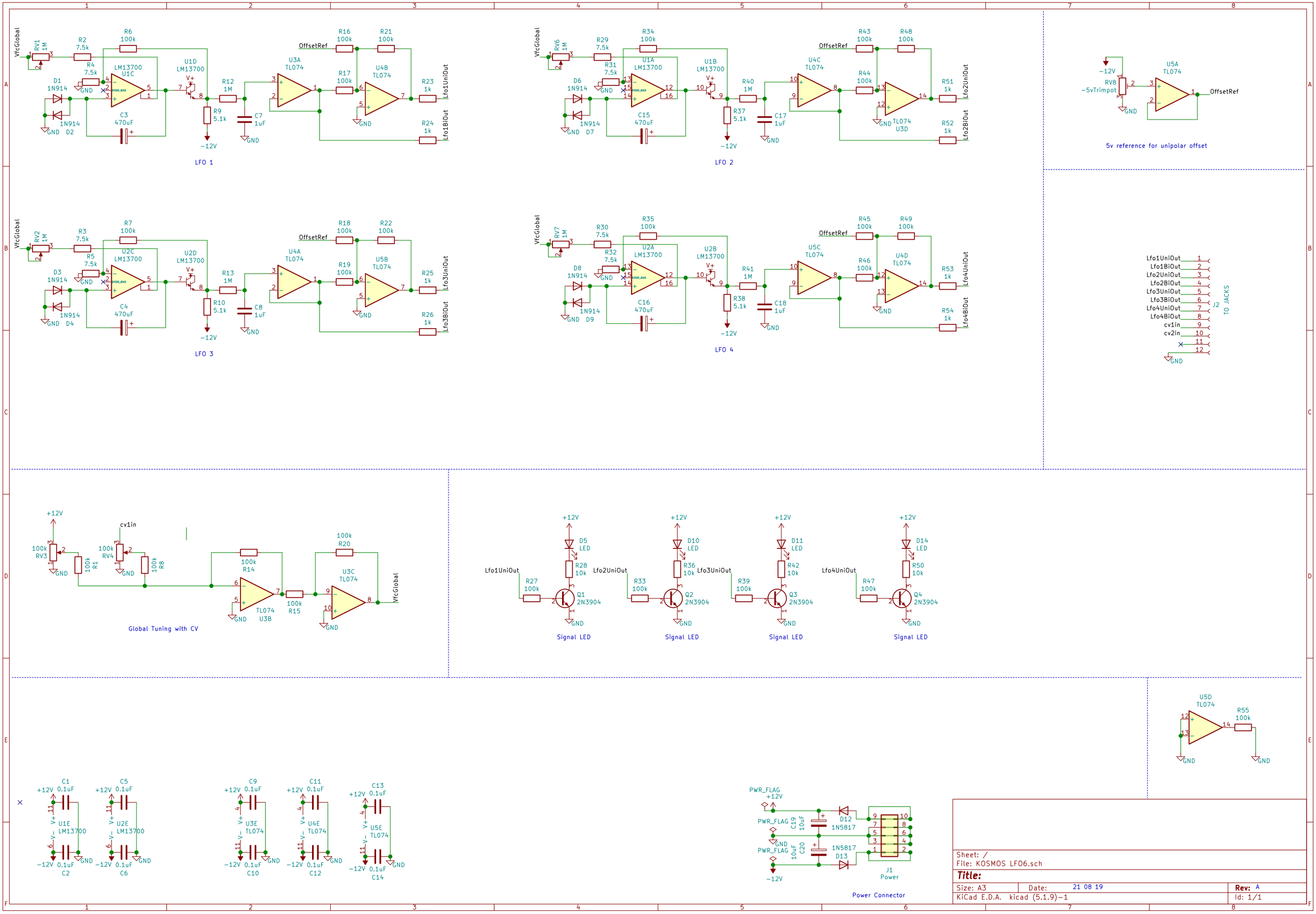
LFO 1
LFO 2
LFO 3
LFO 4
5v reference for unipolar offset
TO JACKS
Global Tuning with CV
Signal LED
Signal LED
Signal LED
Signal LED
Power Connector
Sheet: /
File: KOSMOS LFO6.sch
Title:
Size: A3
Date: 21 08 19
Rev: A
KiCad E.D.A. kicad (5.1.9)-1
Id: 1/1