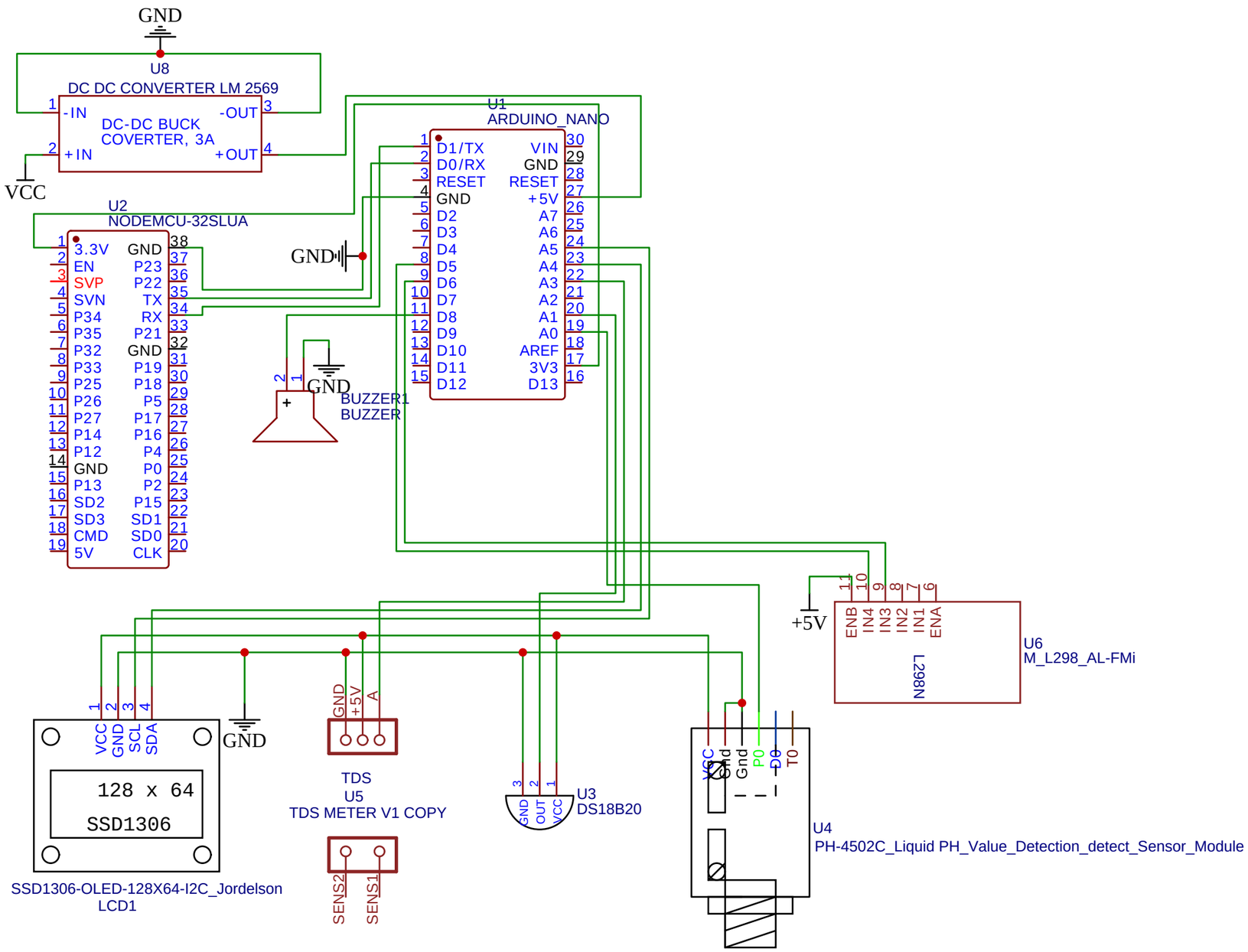

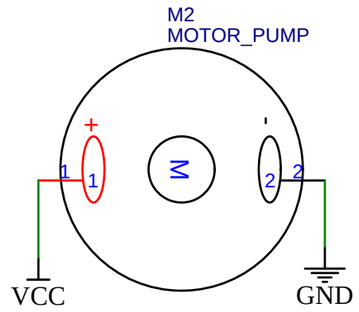

TITLE: Smart hydrophonics system		REV: 1.0
嘉立创EDA	Company: Dixon Sunny	Sheet: 1/1
	Date: 2022-10-31 Drawn By: Dixon Sunny	