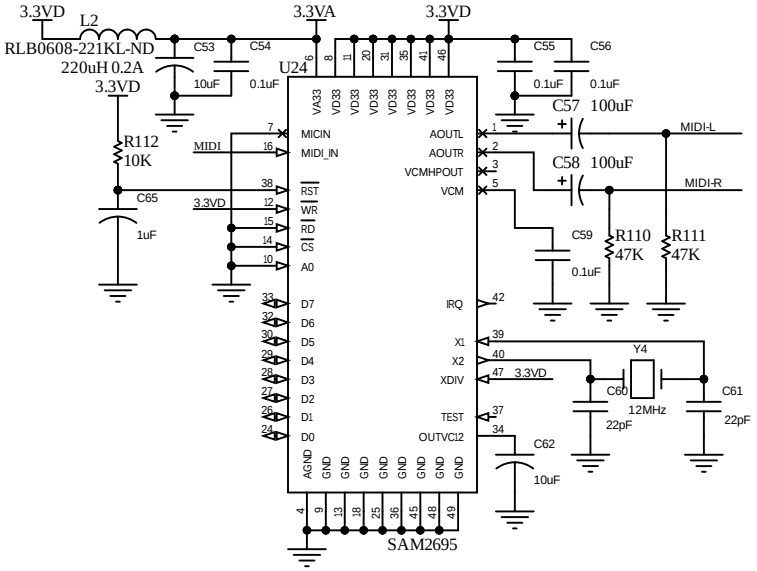

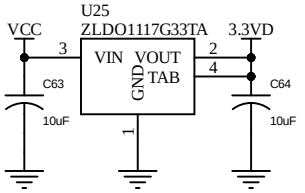

Title	SAM2695	
Size Letter	Number	Revision
Date: 1/24/2025		Sheet of
File: C:\My Files\..\SAM2695.SchDoc		Drawn By: