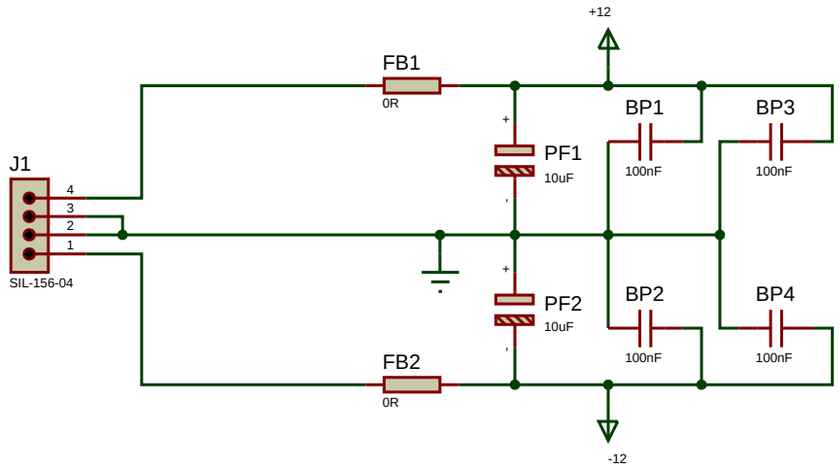
+12
FB1
0R
BP1
BP3
PF1
10uF
100nF
100nF
J1
4
3
2
1
SIL-156-04
PF2
10uF
BP2
BP4
100nF
100nF
FB2
0R
-12

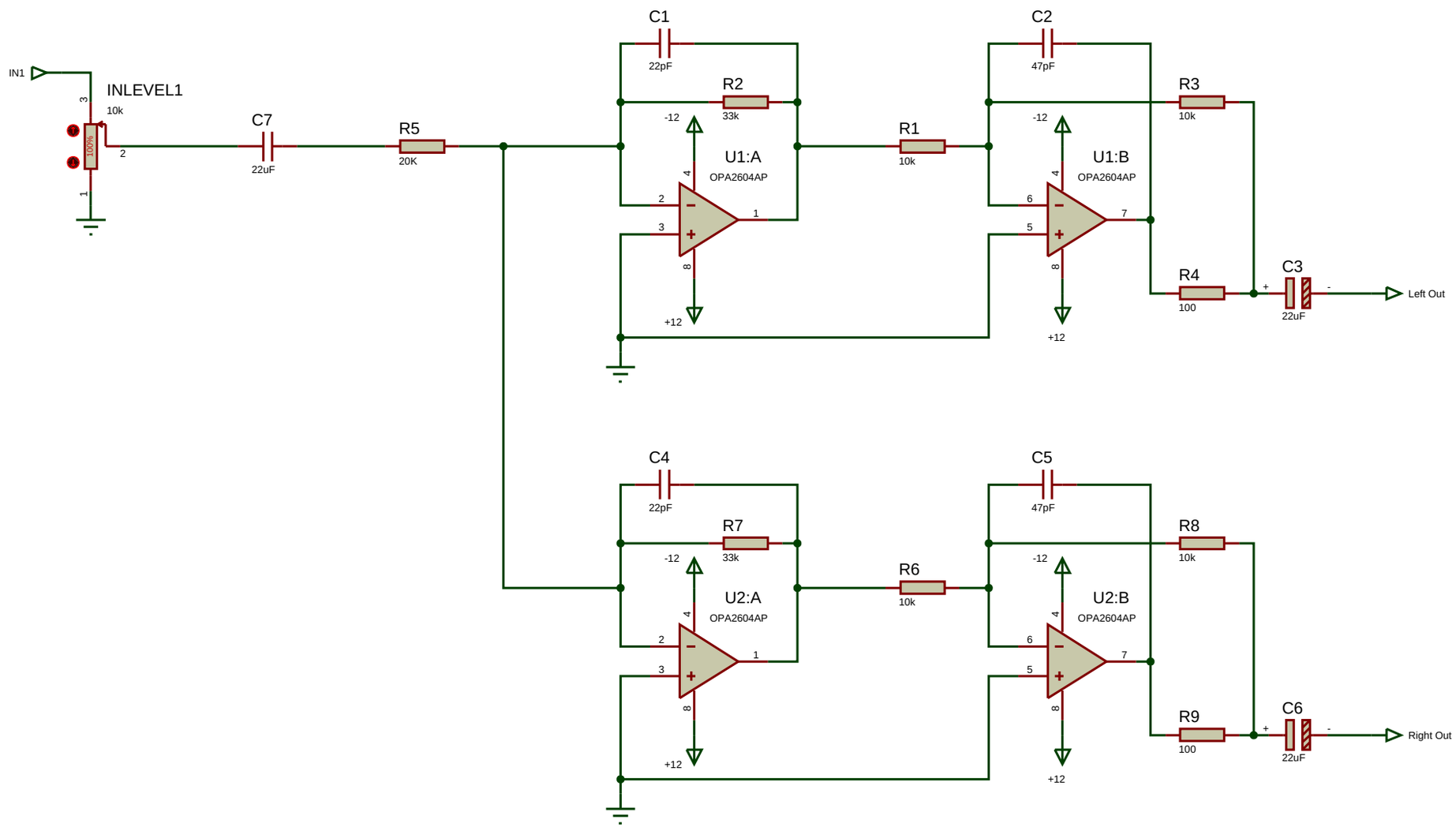
IN1
INLEVEL1
10k
100%
C7
22uF
R5
20K
C1
22pF
R2
33k
-12
U1:A
OPA2604AP
+12
R1
10k
C2
47pF
R3
10k
-12
U1:B
OPA2604AP
+12
R4
100
C3
22uF
Left Out
C4
22pF
R7
33k
-12
U2:A
OPA2604AP
+12
R6
10k
C5
47pF
R8
10k
-12
U2:B
OPA2604AP
+12
R9
100
C6
22uF
Right Out