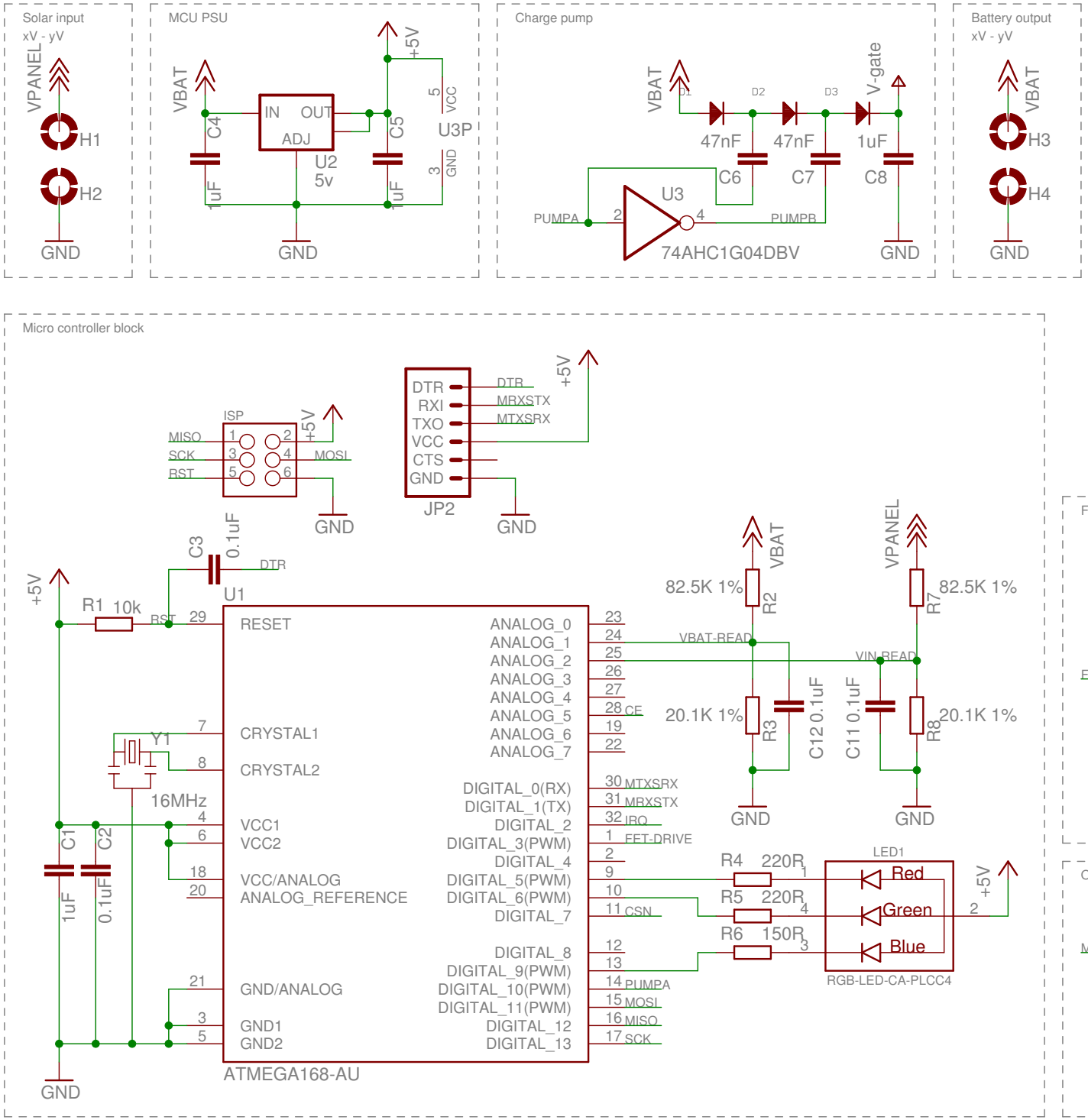
Solar input
xV - yV
VPANEL
H1
H2
GND
MCU PSU
VBAT
C4
1uF
IN
OUT
ADJ
U2
5v
C5
1uF
+5V
5
VCC
U3P
3
GND
GND
Charge pump
VBAT
D1
D2
D3
V-gate
47nF
47nF
1uF
C6
C7
C8
U3
PUMPA
2
4
PUMPB
74AHC1G04DBV
GND
Battery output
xV - yV
VBAT
H3
H4
GND
Micro controller block
ISP
MISO
SCK
RST
MOSI
+5V
GND
DTR
RXI
TXO
VCC
CTS
GND
JP2
DTR
MRXSTX
MTXSRX
+5V
GND
C3
0.1uF
DTR
+5V
R1 10k
RST
29
U1
RESET
ANALOG_0
ANALOG_1
ANALOG_2
ANALOG_3
ANALOG_4
ANALOG_5
ANALOG_6
ANALOG_7
23
24
25
26
27
28 CE
19
22
VBAT-READ
VIN-READ
82.5K 1%
R2
VBAT
VPANEL
R7
82.5K 1%
20.1K 1%
R3
C12 0.1uF
C11 0.1uF
R8
20.1K 1%
GND
GND
7
CRYSTAL1
Y1
8
CRYSTAL2
16MHz
DIGITAL_0(RX)
DIGITAL_1(TX)
DIGITAL_2
DIGITAL_3(PWM)
DIGITAL_4
DIGITAL_5(PWM)
DIGITAL_6(PWM)
DIGITAL_7
30 MTXSRX
31 MRXSTX
32 IRQ
1 FET-DRIVE
2
9
10
11 CSN
4
6
VCC1
VCC2
18
20
VCC/ANALOG
ANALOG_REFERENCE
C1
C2
1uF
0.1uF
R4 220R
R5 220R
R6 150R
LED1
Red
Green
Blue
RGB-LED-CA-PLCC4
+5V
2
DIGITAL_8
DIGITAL_9(PWM)
DIGITAL_10(PWM)
DIGITAL_11(PWM)
DIGITAL_12
DIGITAL_13
12
13
14 PUMPA
15 MOSI
16 MISO
17 SCK
21
GND/ANALOG
3
GND1
5
GND2
GND
ATMEGA168-AU
Fet-drive
V-gate
Q2
VPANEL
VBAT
FET-DRIVE
MOSFET-NCHANNEL-IRLR3705ZPBF
Q3
10k
R9
GND
Options
M04X2
IRQ
MOSI2
CSN
MISO2
SCK2
CE
MISO
SCK
MOSI
NRF
+5V
1uF
1uF
C9
C10
GND