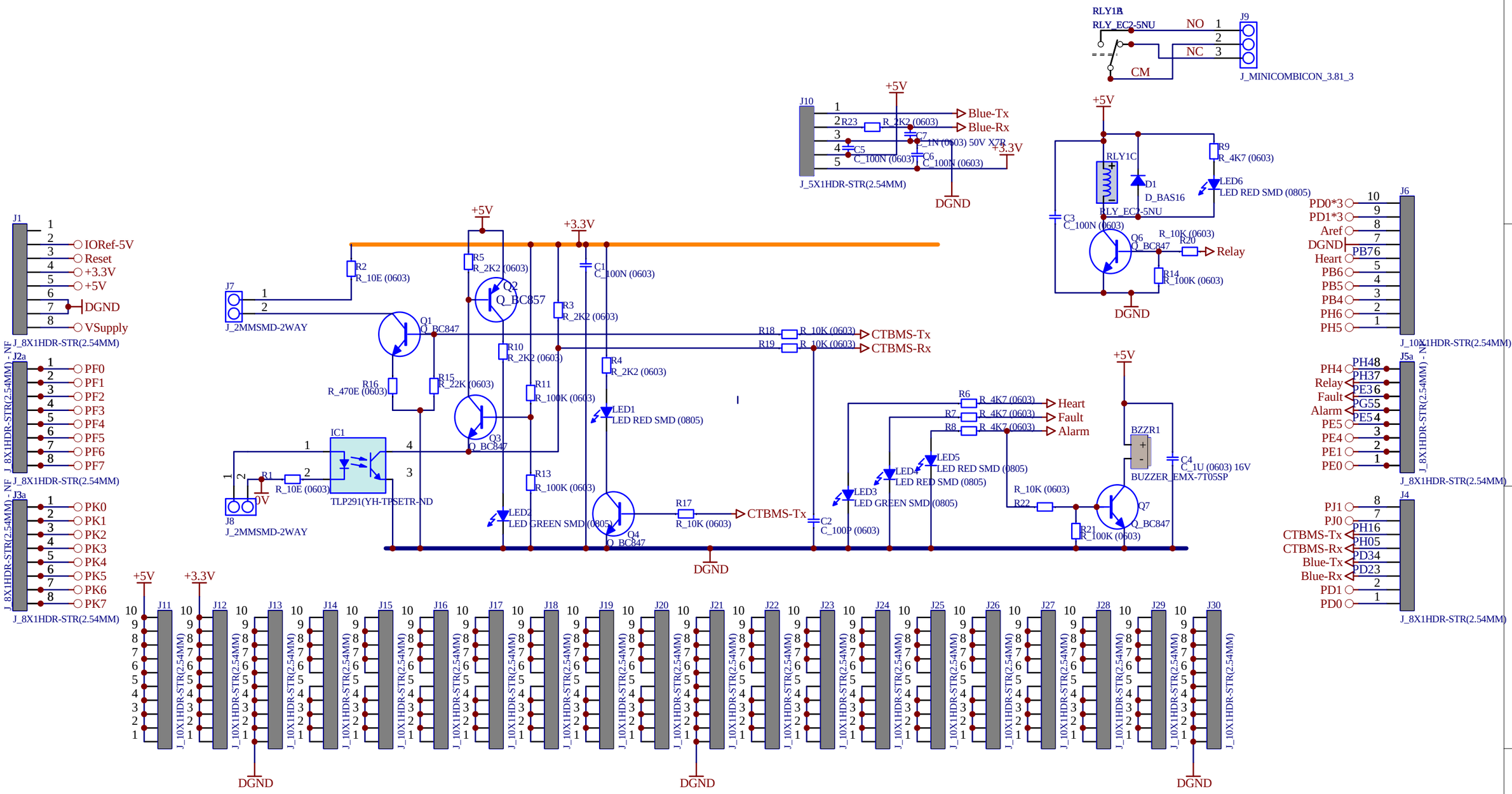

Printed:	17-Aug-2017
Date:	10th Aug 2016
TITLE:	Open Source BMS Controller
Drwg No:	
Rev:	1
PCB:	PCB-BMS-Controller
Page:	Master Sheet
Drawn:	Alan Chapman

Open Source

DARC Technologies Ltd
Christchurch