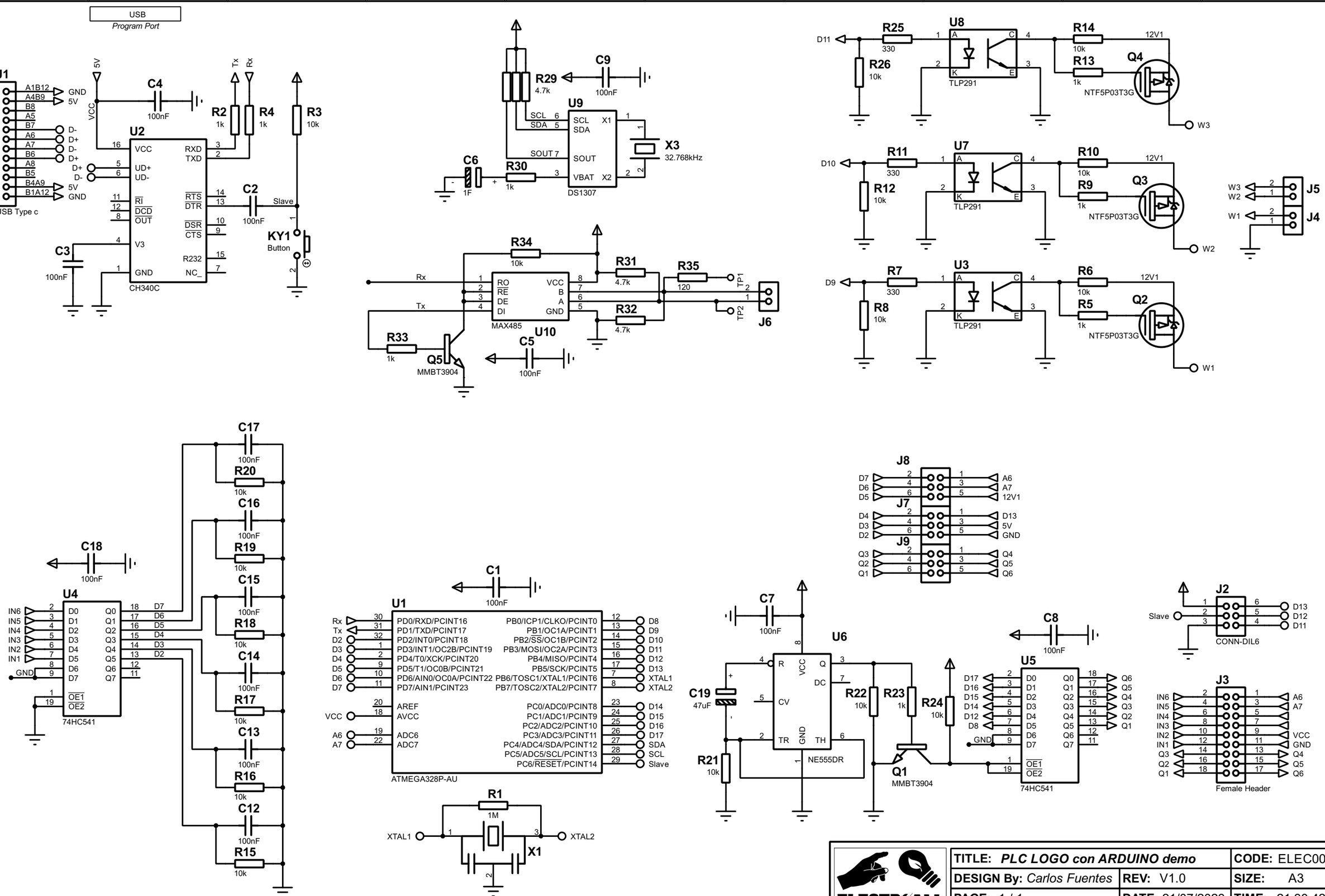

TITLE: *PLC LOGO con ARDUINO demo*		CODE: ELEC001
DESIGN By: *Carlos Fuentes*	REV: V1.0	SIZE: A3
PAGE: 1 / 1	DATE: 21/07/2023	TIME: 21:30:42