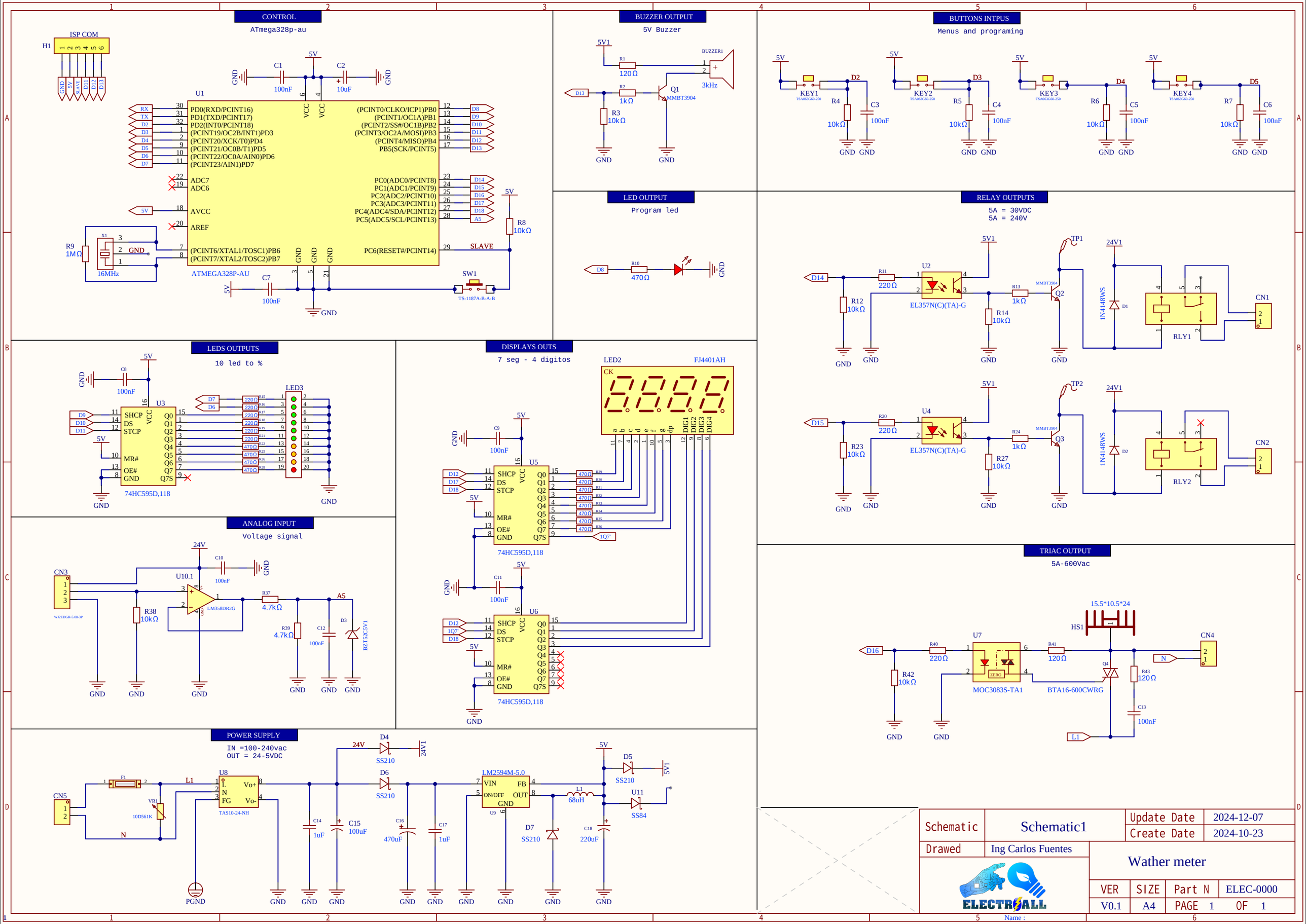
CONTROL
ATmega328p-au
ISP COM
H1
U1
ATMEGA328P-AU
16MHz
X1
R9 1MΩ
C1 100nF
C2 10uF
C7 100nF
R8 10kΩ
SW1
TS-1187A-B-A-B
SLAVE
BUZZER OUTPUT
5V Buzzer
BUZZER1
3kHz
R1 120Ω
R2 1kΩ
R3 10kΩ
Q1 MMBT3904
LED OUTPUT
Program led
R10 470Ω
BUTTONS INTPUS
Menus and programing
KEY1
KEY2
KEY3
KEY4
TSA063G60-250
D2
D3
D4
D5
R4 10kΩ
R5 10kΩ
R6 10kΩ
R7 10kΩ
C3 100nF
C4 100nF
C5 100nF
C6 100nF
RELAY OUTPUTS
5A = 30VDC
5A = 240V
U2
U4
EL357N(C)(TA)-G
R11 220Ω
R20 220Ω
R12 10kΩ
R14 10kΩ
R23 10kΩ
R27 10kΩ
R13 1kΩ
R24 1kΩ
MMBT3904
Q2
Q3
TP1
TP2
24V1
1N4148WS
D1
D2
RLY1
RLY2
CN1
CN2
LEDS OUTPUTS
10 led to %
U3
74HC595D,118
LED3
C8 100nF
DISPLAYS OUTS
7 seg - 4 digitos
LED2
FJ4401AH
U5
U6
C9 100nF
C11 100nF
ANALOG INPUT
Voltage signal
CN3
W12EDGR-5.08-3P
U10.1
LM358DR2G
R38 10kΩ
R37 4.7kΩ
R39 4.7kΩ
C10 100nF
C12 100nF
D3
BZT52C5V1
A5
POWER SUPPLY
IN =100-240vac
OUT = 24-5VDC
CN5
F1
VR1
10D561K
U8
TAS10-24-NH
PGND
D4 SS210
D6 SS210
D5 SS210
U11 SS84
LM2594M-5.0
U9
L1 68uH
D7 SS210
C14 1uF
C15 100uF
C16 470uF
C17 1uF
C18 220uF
24V1
5V1
TRIAC OUTPUT
5A-600Vac
15.5*10.5*24
HS1
U7
MOC3083S-TA1
BTA16-600CWRG
Q4
R40 220Ω
R41 120Ω
R42 10kΩ
R43 120Ω
C13 100nF
CN4
L1
N
Schematic
Schematic1
Update Date
2024-12-07
Create Date
2024-10-23
Drawed
Ing Carlos Fuentes
Wather meter
VER
SIZE
Part N
ELEC-0000
V0.1
A4
PAGE 1 OF 1
ELECTROALL
Name :