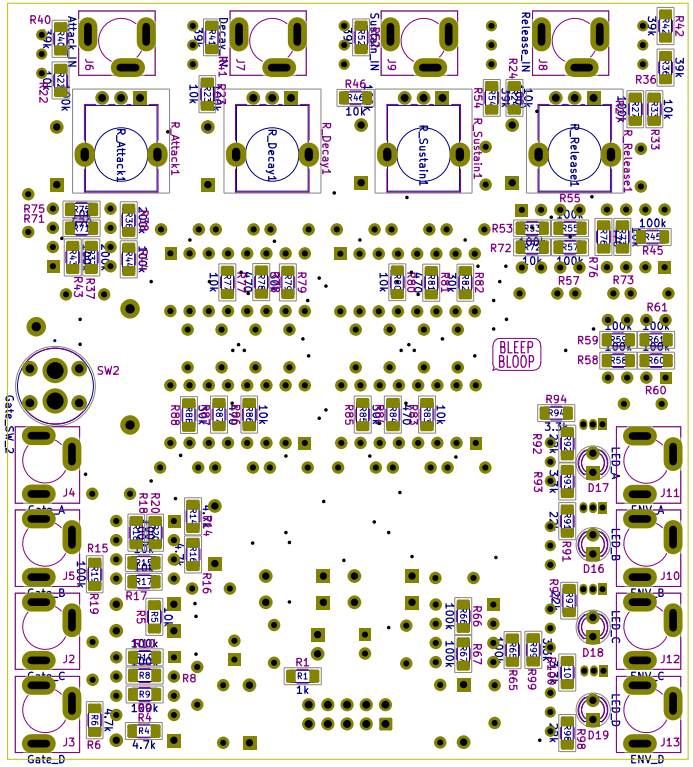

Sheet:
File: poly_envelope.kicad_pcb

Title: Poly Envelope

Size: A4	Date: 2022-01-13	**Rev: v1**
KiCad E.D.A. kicad (6.0.0)		Id: 1/1