B2BConnector

File: B2BConnector.kicad_sch

MainPower

File: MainPower.kicad_sch

Connectors

File: Connectors.kicad_sch

M.2

File: M2.kicad_sch

External INS

File: vectornav.kicad_sch

USB3

File: USB3.kicad_sch

IMPORTANT: FOR USE WITH EchoPilot AI REV 1 OR NEWER

J1 Conn_01x01 — 1 — GND

J2 Conn_01x01 — GND

J3 Conn_01x01 — GND

J4 Conn_01x01 — GND

FID1 Fiducial

FID2 Fiducial

FID3 Fiducial

FID4 Fiducial

FID5 Fiducial

FID6 Fiducial

Echo MAV, LLC

Sheet: /

File: pixc4-jetson-universal-carrier.kicad_sch

Title: EchoPilot Carrier

Size: B	Date: 2021-03-23	**Rev: 1**
KiCad E.D.A. kicad 7.0.6-rc1-29-g152dc56df4		Id: 1/7

TP1
TestPoint
GND

STATUS LEDS
+5V
+5V_FMU
+5V_PROT
D4 LED_G
D5 LED_G
D7 LED_G
R16 1.0K
R17 1.0K
R25 1.0K
GND

PLANE STITCHING CAPS
+5V
+5V_FMU
C41 0.1uF
C42 0.1uF
C62 0.1uF
C71 0.1uF
C72 0.1uF
C90 0.1uF
C91 0.1uF
C92 0.1uF
+1V1
+3.3V

MAIN SYSTEM 5.1V, 5A
+BATT
C8 2.2uF 100V
C11 2.2uF 100V
C13 2.2uF 100V
U4
TPS54561QDPRRQ1
VIN
EN
RT/CLK
SS/TR
COMP
PWRGD
BOOT
SW
FB
EXP
GND
243K R9
C15 10nF
C21 0.1uF
L2 ASPIAIG-F1040-7R3M-I
D3 PDS760-13
R7 16.9K
C17 4.7nF
C19 47pF
R14 54.9K
R15 10.2K

Jetson Power
+5V
C23 47uF 10V
C25 47uF 10V
C27 47uF 10V

POWER IN
J27
XT30PW-M
XT30 IN
PWR_IN
D1 TVS
R5 750m
C9 10uF 100V

REVERSE POLARITY PROTECTION
SQJ463EP-T1_GE3
Q2
+BATT
D_Zener
D6 12V
R18 10K

FMU SYSTEM 5.4V, 5A
+BATT
C7 2.2uF 100V
C10 2.2uF 100V
C12 2.2uF 100V
U3
TPS54561QDPRRQ1
243K R8
C14 10nF
C20 0.1uF
L1 ASPIAIG-F1040-7R3M-I
D2 PDS760-13
R6 16.9K
C16 4.7nF
C18 47pF
R10 57.6K
R12 10.2K

FMU Power
+5V_FMU
C22 47uF 10V
C24 47uF 10V
C26 47uF 10V

CURRENT LIMITED 5V OUT
USED FOR SPARE, IRIDIUM
+5V
U6
TPS2561
IN
EN1
EN2
PAD
GND
OUT1
FAULT1
OUT2
FAULT2
ILM
0.1uF C35
+5V_PROT
+5V_PROT_INS
J11
Conn_01x02
C93 47uF 10V
C94 47uF 10V
R24 37.4K 1%
1.5A LIMIT
CURRENT LIMITED 5V OUT
USED FOR INS/RS-232

USB HUB POWER
U5
LTC3622IDE-2-PBF
VIN1
VIN2
RUN1
RUN2
SW1
FB1
INTVCC
MODE/SYNC
PHASE
ILIM
SW2
FB2
GND
PGOOD1
PGOOD2
+5V
C30 10uF
PGOOD2
C49 1.0uF
INTVCC
+3.3V
L6 1.2uH
C32 22uF
C31 22pF
R11 619K
R13 137K
R38 10K
L5 1.2uH
R20 619K
R21 732K
C34 22pF
+1V1
C33 22uF

3.3V AND 1.1V POWER
RUN/PGOOD LOGIC ENSURES 1.1V SUPPLY IS STABLE FIRST, AS REQUIRED BY USB HUB

Echo MAV, LLC
Sheet: /MainPower/
File: MainPower.kicad_sch
Title: EchoPilot Carrier
Size: B | Date: 2021-03-23 | Rev: 1
KiCad E.D.A. kicad 7.0.6-rc1-29-g152dc56df4 | Id: 2/7

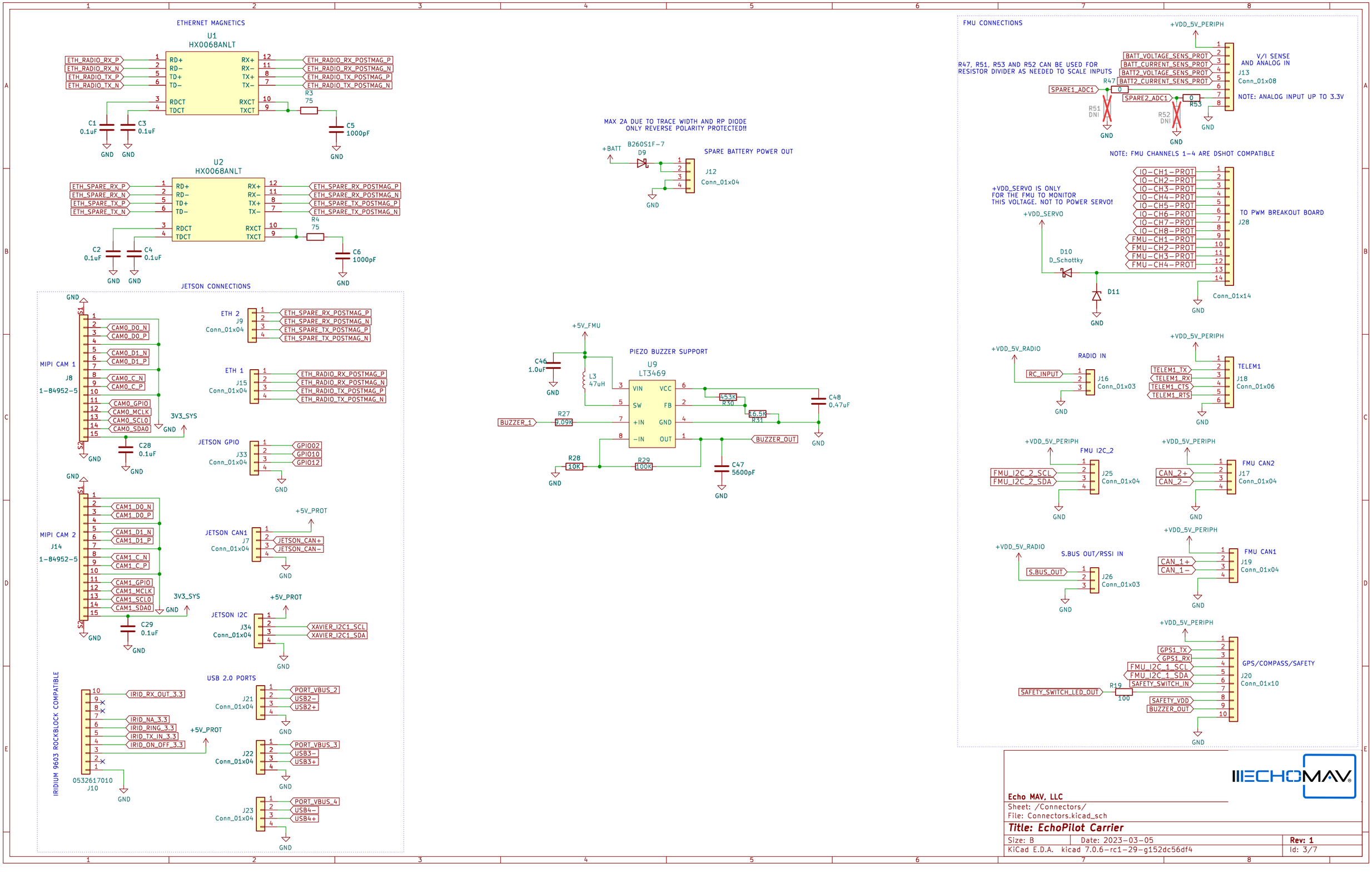
ETHERNET MAGNETICS
U1
HX0068ANLT
ETH_RADIO_RX_P
ETH_RADIO_RX_N
ETH_RADIO_TX_P
ETH_RADIO_TX_N
RD+
RD−
TD+
TD−
RDCT
TDCT
RX+
RX−
TX+
TX−
RXCT
TXCT
ETH_RADIO_RX_POSTMAG_P
ETH_RADIO_RX_POSTMAG_N
ETH_RADIO_TX_POSTMAG_P
ETH_RADIO_TX_POSTMAG_N
R3
75
C1
0.1uF
C3
0.1uF
C5
1000pF
GND
U2
HX0068ANLT
ETH_SPARE_RX_P
ETH_SPARE_RX_N
ETH_SPARE_TX_P
ETH_SPARE_TX_N
ETH_SPARE_RX_POSTMAG_P
ETH_SPARE_RX_POSTMAG_N
ETH_SPARE_TX_POSTMAG_P
ETH_SPARE_TX_POSTMAG_N
R4
75
C2
0.1uF
C4
0.1uF
C6
1000pF
JETSON CONNECTIONS
MIPI CAM 1
J8
1-84952-5
CAM0_D0_N
CAM0_D0_P
CAM0_D1_N
CAM0_D1_P
CAM0_C_N
CAM0_C_P
CAM0_GPIO
CAM0_MCLK
CAM0_SCL0
CAM0_SDA0
3V3_SYS
C28
0.1uF
ETH 2
J9
Conn_01x04
ETH 1
J15
Conn_01x04
JETSON GPIO
J33
Conn_01x04
GPIO02
GPIO10
GPIO12
MIPI CAM 2
J14
1-84952-5
CAM1_D0_N
CAM1_D0_P
CAM1_D1_N
CAM1_D1_P
CAM1_C_N
CAM1_C_P
CAM1_GPIO
CAM1_MCLK
CAM1_SCL0
CAM1_SDA0
C29
0.1uF
JETSON CAN1
J7
Conn_01x04
JETSON_CAN+
JETSON_CAN−
+5V_PROT
JETSON I2C
J34
Conn_01x04
XAVIER_I2C1_SCL
XAVIER_I2C1_SDA
IRIDIUM 9603 ROCKBLOCK COMPATIBLE
0532617010
J10
IRID_RX_OUT_3.3
IRID_NA_3.3
IRID_RING_3.3
IRID_TX_IN_3.3
IRID_ON_OFF_3.3
USB 2.0 PORTS
J21
Conn_01x04
J22
Conn_01x04
J23
Conn_01x04
PORT_VBUS_2
USB2−
USB2+
PORT_VBUS_3
USB3−
USB3+
PORT_VBUS_4
USB4−
USB4+
MAX 2A DUE TO TRACE WIDTH AND RP DIODE
ONLY REVERSE POLARITY PROTECTED!!
+BATT
B260S1F-7
D9
SPARE BATTERY POWER OUT
J12
Conn_01x04
+5V_FMU
PIEZO BUZZER SUPPORT
U9
LT3469
C46
1.0uF
L3
47uH
VIN
SW
+IN
−IN
VCC
FB
GND
OUT
453K
R30
6.5K
R31
C48
0.47uF
BUZZER_1
R27
9.09K
BUZZER_OUT
R28
10K
R29
100K
C47
5600pF
FMU CONNECTIONS
+VDD_5V_PERIPH
R47, R51, R53 AND R52 CAN BE USED FOR
RESISTOR DIVIDER AS NEEDED TO SCALE INPUTS
V/I SENSE
AND ANALOG IN
J13
Conn_01x08
NOTE: ANALOG INPUT UP TO 3.3V
BATT_VOLTAGE_SENS_PROT
BATT_CURRENT_SENS_PROT
BATT2_VOLTAGE_SENS_PROT
BATT2_CURRENT_SENS_PROT
SPARE1_ADC1
SPARE2_ADC1
R47
R51
DNI
R52
DNI
R53
NOTE: FMU CHANNELS 1-4 ARE DSHOT COMPATIBLE
+VDD_SERVO IS ONLY
FOR THE FMU TO MONITOR
THIS VOLTAGE. NOT TO POWER SERVO!
+VDD_SERVO
D10
D_Schottky
D11
IO−CH1−PROT
IO−CH2−PROT
IO−CH3−PROT
IO−CH4−PROT
IO−CH5−PROT
IO−CH6−PROT
IO−CH7−PROT
IO−CH8−PROT
FMU−CH1−PROT
FMU−CH2−PROT
FMU−CH3−PROT
FMU−CH4−PROT
TO PWM BREAKOUT BOARD
J28
Conn_01x14
+VDD_5V_RADIO
RADIO IN
RC_INPUT
J16
Conn_01x03
TELEM1
J18
Conn_01x06
TELEM1_TX
TELEM1_RX
TELEM1_CTS
TELEM1_RTS
FMU I2C_2
J25
Conn_01x04
FMU_I2C_2_SCL
FMU_I2C_2_SDA
FMU CAN2
J17
Conn_01x04
CAN_2+
CAN_2−
S.BUS OUT/RSSI IN
J26
Conn_01x03
S.BUS_OUT
FMU CAN1
J19
Conn_01x04
CAN_1+
CAN_1−
GPS/COMPASS/SAFETY
J20
Conn_01x10
GPS1_TX
GPS1_RX
FMU_I2C_1_SCL
FMU_I2C_1_SDA
SAFETY_SWITCH_IN
SAFETY_SWITCH_LED_OUT
R19
100
SAFETY_VDD
BUZZER_OUT
Echo MAV, LLC
Sheet: /Connectors/
File: Connectors.kicad_sch
Title: EchoPilot Carrier
Size: B
Date: 2023-03-05
Rev: 1
KiCad E.D.A. kicad 7.0.6-rc1-29-g152dc56df4
Id: 3/7

JETSON

J5A
FX23L-80P-0.5SV10

1	JETSON_CAN+	
2	JETSON_CAN-	
3	GND	
4	CAM0_SDA0	
5	CAM0_SCL0	
6	CAM0_MCLK	
7	CAM0_GPIO	
8	GND	
9	CAM0_D1_P	
10	CAM0_D1_N	
11	GND	
12	CAM0_C_P	
13	CAM0_C_N	
14	GND	
15	CAM0_D0_P	
16	CAM0_D0_N	
17	GND	
18	CAM1_SDA0	
19	CAM1_SCL0	
20	CAM1_MCLK	
21	CAM1_GPIO	
22	GND	
23	CAM1_D1_P	
24	CAM1_D1_N	
25	GND	
26	CAM1_C_P	
27	CAM1_C_N	
28	GND	
29	CAM1_D0_P	
30	CAM1_D0_N	
31	GND	
32	I2S0_DOUT	
33	I2S0_DIN	
34	I2S0_FS	
35	I2S0_SCLK	
36	AUDIO_MCLK	
37	GPIO12	
38	GPIO10	
39	GND	
40	IRID_RX_OUT_3.3	

J5B
FX23L-80P-0.5SV10

41	ETH_SPARE_TX_N	
42	ETH_SPARE_TX_P	
43	ETH_SPARE_RX_N	
44	ETH_SPARE_RX_P	
45	GND	
46	ETH_RADIO_RX_P	
47	ETH_RADIO_RX_N	
48	ETH_RADIO_TX_P	
49	ETH_RADIO_TX_N	
50	GND	
51	USBSS_RX_P	
52	USBSS_RX_N	
53	GND	
54	USBSS_TX_P	
55	USBSS_TX_N	
56	GND	
57	PORT_VBUS_JETSON	
58	JETSON_USB1_D_P	
59	JETSON_USB1_D_N	
60	GND	
61	PORT_VBUS_4	
62	USB4+	
63	USB4-	
64	GND	
65	PORT_VBUS_3	
66	USB3+	
67	USB3-	
68	GND	
69	PORT_VBUS_2	
70	USB2+	
71	USB2-	
72	GND	
73	IRID_NA_3.3	
74	IRID_RING_3.3	
75	IRID_TX_IN_3.3	
76	IRID_ON_OFF_3.3	
77	XAVIER_I2C1_SDA	
78	XAVIER_I2C1_SCL	
79	GPIO02	
80	F1 1A → 3V3_SYS	

ADD MAGNETICS TO CARRIER BOARD

J5C
FX23L-80P-0.5SV10

P1	+5V	
P2		
P3	GND	
P4		
MNT_1	GND	
MNT_2		

FMU

J6A
FX23L-80P-0.5SV10

1	FMU-CH6-PROT	
2	FMU-CH5-PROT	
3	FMU-CH4-PROT	
4	FMU-CH3-PROT	
5	FMU-CH2-PROT	
6	FMU-CH1-PROT	
7	IO-CH1-PROT	
8	IO-CH2-PROT	
9	IO-CH3-PROT	
10	IO-CH4-PROT	
11	IO-CH5-PROT	
12	IO-CH6-PROT	
13	IO-CH7-PROT	
14	IO-CH8-PROT	
15	GND	
16	+VDD_5V_PERIPH	
17	FMU_I2C_2_SCL	
18	FMU_I2C_2_SDA	
19	GND	
20	CAN_2+	
21	CAN_2-	
22	GND	
23	CAN_1+	
24	CAN_1-	
25	GND	
26	TELEM1_RTS	
27	TELEM1_CTS	
28	TELEM1_RX	
29	TELEM1_TX	
30	GND	
31	BATT_CURRENT_SENS_PROT	
32	BATT_VOLTAGE_SENS_PROT	
33	+VDD_SERVO	
34	GND	
35	ONLY USED TO SENSE VSERVO VOLTAGE	
36	GND	
37		
38		
39		
40		

RC IN

FMU POWER

J6B
FX23L-80P-0.5SV10

41	+VDD_5V_PERIPH	
42	SPI5_SCK_EXTERNAL1	
43	SPI5_MISO_EXTERNAL1	
44	SPI5_MOSI_EXTERNAL1	
45	SPI5_CS1_EXTERNAL1	
46	SPI5_CS2_EXTERNAL1	
47	GND	
48		
49	GPS1_TX	
50	GPS1_RX	
51	FMU_I2C_1_SCL	
52	FMU_I2C_1_SDA	
53	GND	
54	SAFETY_SWITCH_IN	
55	SAFETY_SWITCH_LED_OUT	
56	SAFETY_VDD	
57	BUZZER_1	
58	GND	
59	+VDD_5V_RADIO	
60	RC_INPUT	
61	GND	
62	+5V_FMU	
63		
64		
65		
66		
67		
68		
69	GND	
70	VDD_POWERA_VALID	
71	VDD_POWERB_VALID	
72	S.BUS_OUT	
73	UART4_TX	
74	UART4_RX	
75	GND	
76	BATT2_CURRENT_SENS_PROT	
77	BATT2_VOLTAGE_SENS_PROT	
78	SPARE1_ADC1	
79	SPARE2_ADC1	
80		

OPTIONAL SPI EXTERNAL SENSOR

EXT GPS/COMPASS

NO B POWER SOURCE ON THIS BOARD, THE FMU WILL PULL THIS UP

J6C
FX23L-80P-0.5SV10

P1	+5V	
P2		
P3	GND	
P4		
MNT_1	GND	
MNT_2		

+5V_FMU

R2
220

VDD_POWERA_VALID

Q1
Q_NMOS_GSD

R1
10K

GND

Echo MAV, LLC

Sheet: /B2BConnector/
File: B2BConnector.kicad_sch

Title: EchoPilot Carrier

Size: B	Date: 2021-03-23	**Rev: 1**
KiCad E.D.A. kicad 7.0.6-rc1-29-g152dc56df4		Id: 4/7

PER R1, ONLY EXTERNAL INS ARE SUPPORTED VIA J32. E.G. VECTORNAV VN-100, 200, 300, 110, 210, 310
CUSTOM CABLE SOLUTIONS WILL BE REQUIRED

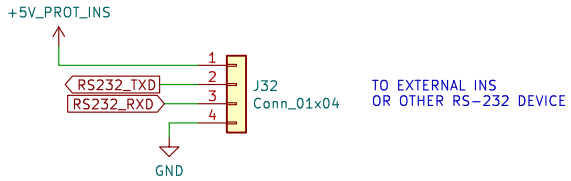

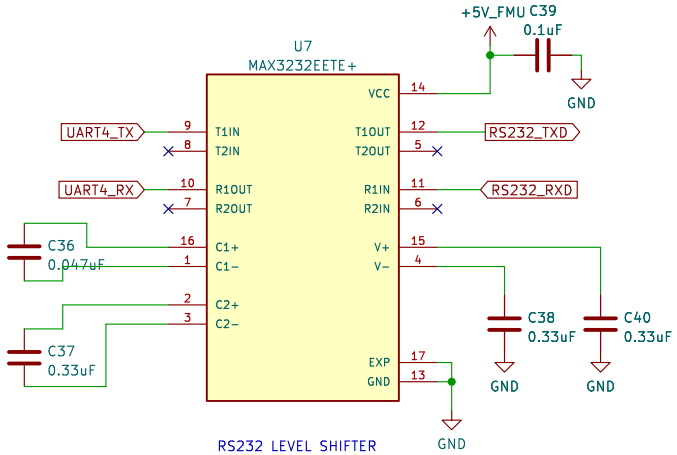

Echo MAV, LLC
Sheet: /External INS/
File: vectornav.kicad_sch

Title: EchoPilot Carrier

Size: A4	Date: 2023-06-25	**Rev: 1**
KiCad E.D.A. kicad 7.0.6-rc1-29-g152dc56df4		Id: 5/7

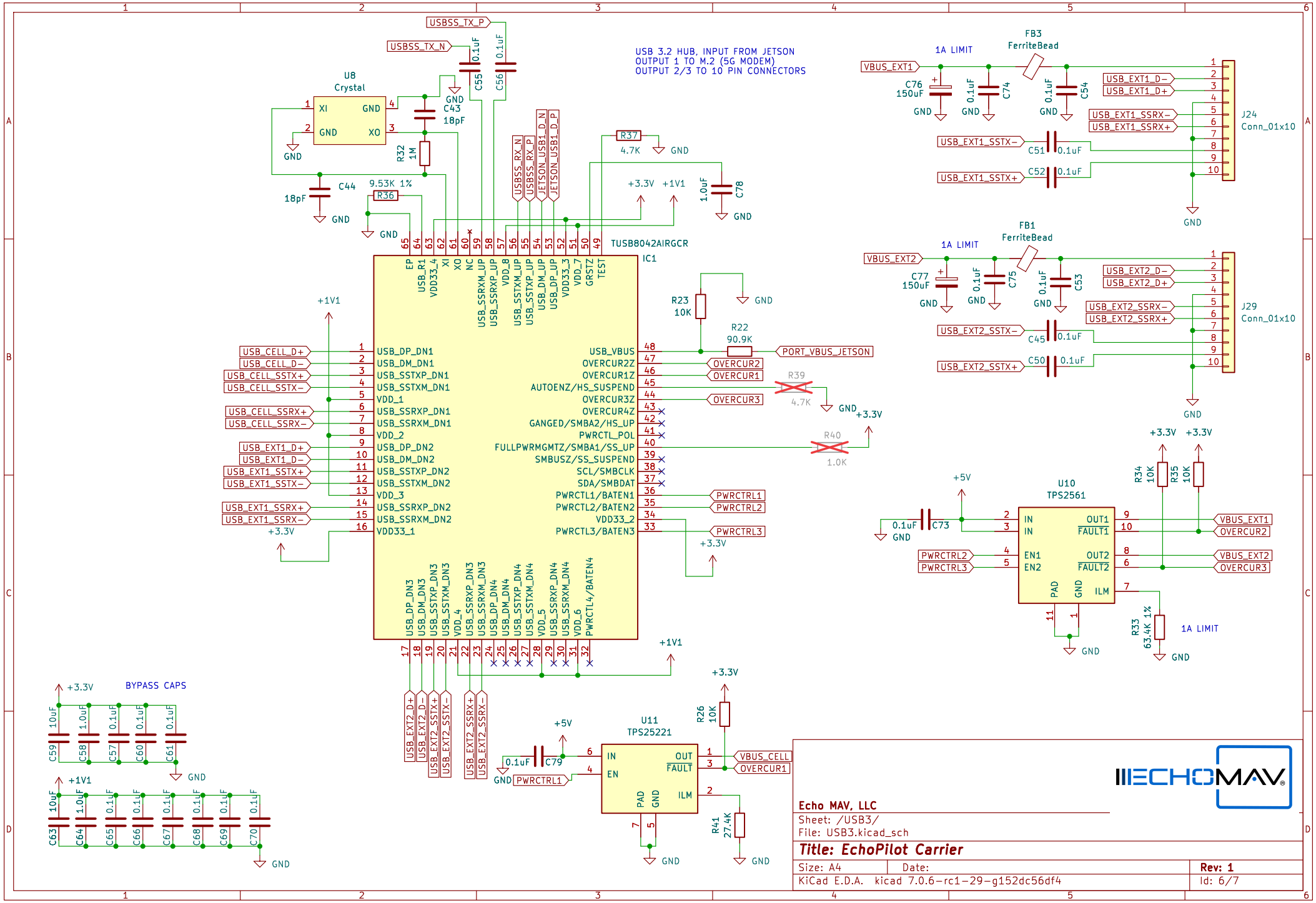
USB 3.2 HUB, INPUT FROM JETSON
OUTPUT 1 TO M.2 (5G MODEM)
OUTPUT 2/3 TO 10 PIN CONNECTORS
TUSB8042AIRGCR
IC1
U8
Crystal
U10
TPS2561
U11
TPS25221
FB3
FB1
FerriteBead
1A LIMIT
J24
J29
Conn_01x10
BYPASS CAPS
Echo MAV, LLC
Sheet: /USB3/
File: USB3.kicad_sch
Title: EchoPilot Carrier
Size: A4
Date:
Rev: 1
KiCad E.D.A. kicad 7.0.6-rc1-29-g152dc56df4
Id: 6/7

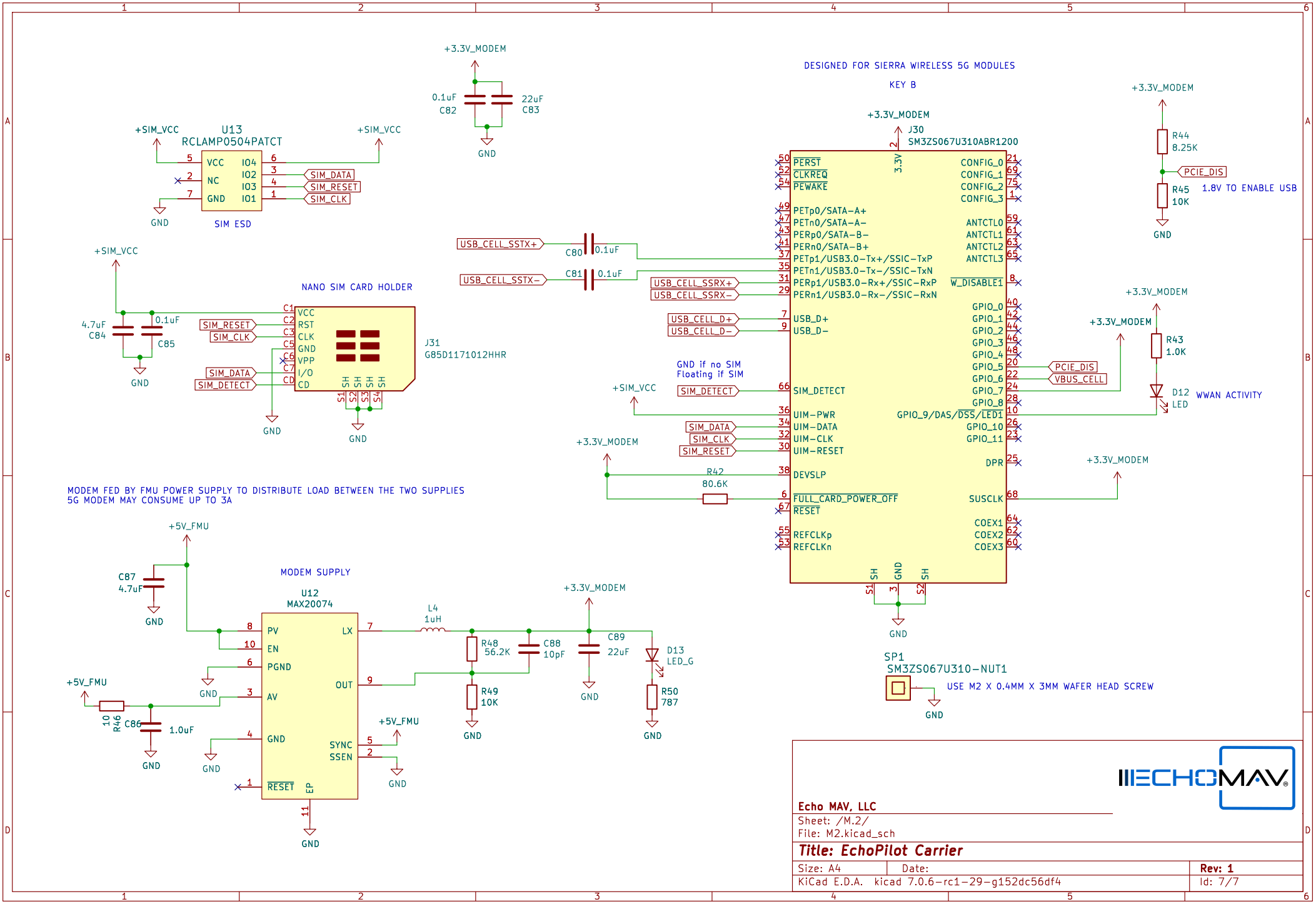
DESIGNED FOR SIERRA WIRELESS 5G MODULES
KEY B
J30
SM3ZS067U310ABR1200
+3.3V_MODEM
0.1uF
C82
22uF
C83
GND
+SIM_VCC
U13
RCLAMP0504PATCT
VCC
NC
GND
IO4
IO2
IO3
IO1
SIM_DATA
SIM_RESET
SIM_CLK
SIM ESD
NANO SIM CARD HOLDER
J31
G85D1171012HHR
4.7uF
C84
0.1uF
C85
SIM_DETECT
VCC
RST
CLK
GND
VPP
I/O
CD
USB_CELL_SSTX+
USB_CELL_SSTX−
C80
C81
USB_CELL_SSRX+
USB_CELL_SSRX−
USB_CELL_D+
USB_CELL_D−
GND if no SIM
Floating if SIM
PERST
CLKREQ
PEWAKE
PETp0/SATA-A+
PETn0/SATA-A−
PERp0/SATA-B−
PERn0/SATA-B+
PETp1/USB3.0-Tx+/SSIC-TxP
PETn1/USB3.0-Tx−/SSIC-TxN
PERp1/USB3.0-Rx+/SSIC-RxP
PERn1/USB3.0-Rx−/SSIC-RxN
USB_D+
USB_D−
SIM_DETECT
UIM-PWR
UIM-DATA
UIM-CLK
UIM-RESET
DEVSLP
FULL_CARD_POWER_OFF
RESET
REFCLKp
REFCLKn
CONFIG_0
CONFIG_1
CONFIG_2
CONFIG_3
ANTCTL0
ANTCTL1
ANTCTL2
ANTCTL3
W_DISABLE1
GPIO_0
GPIO_1
GPIO_2
GPIO_3
GPIO_4
GPIO_5
GPIO_6
GPIO_7
GPIO_8
GPIO_9/DAS/DSS/LED1
GPIO_10
GPIO_11
DPR
SUSCLK
COEX1
COEX2
COEX3
3.3V
R42
80.6K
R44
8.25K
R45
10K
PCIE_DIS
1.8V TO ENABLE USB
R43
1.0K
D12
LED
WWAN ACTIVITY
VBUS_CELL
MODEM FED BY FMU POWER SUPPLY TO DISTRIBUTE LOAD BETWEEN THE TWO SUPPLIES
5G MODEM MAY CONSUME UP TO 3A
+5V_FMU
C87
4.7uF
MODEM SUPPLY
U12
MAX20074
PV
EN
PGND
AV
GND
RESET
EP
LX
OUT
SYNC
SSEN
L4
1uH
R48
56.2K
R49
10K
C88
10pF
C89
22uF
D13
LED_G
R50
787
R46
10
C86
1.0uF
SP1
SM3ZS067U310-NUT1
USE M2 X 0.4MM X 3MM WAFER HEAD SCREW
ECHOMAV
Echo MAV, LLC
Sheet: /M.2/
File: M2.kicad_sch
Title: EchoPilot Carrier
Size: A4
Date:
Rev: 1
KiCad E.D.A. kicad 7.0.6-rc1-29-g152dc56df4
Id: 7/7