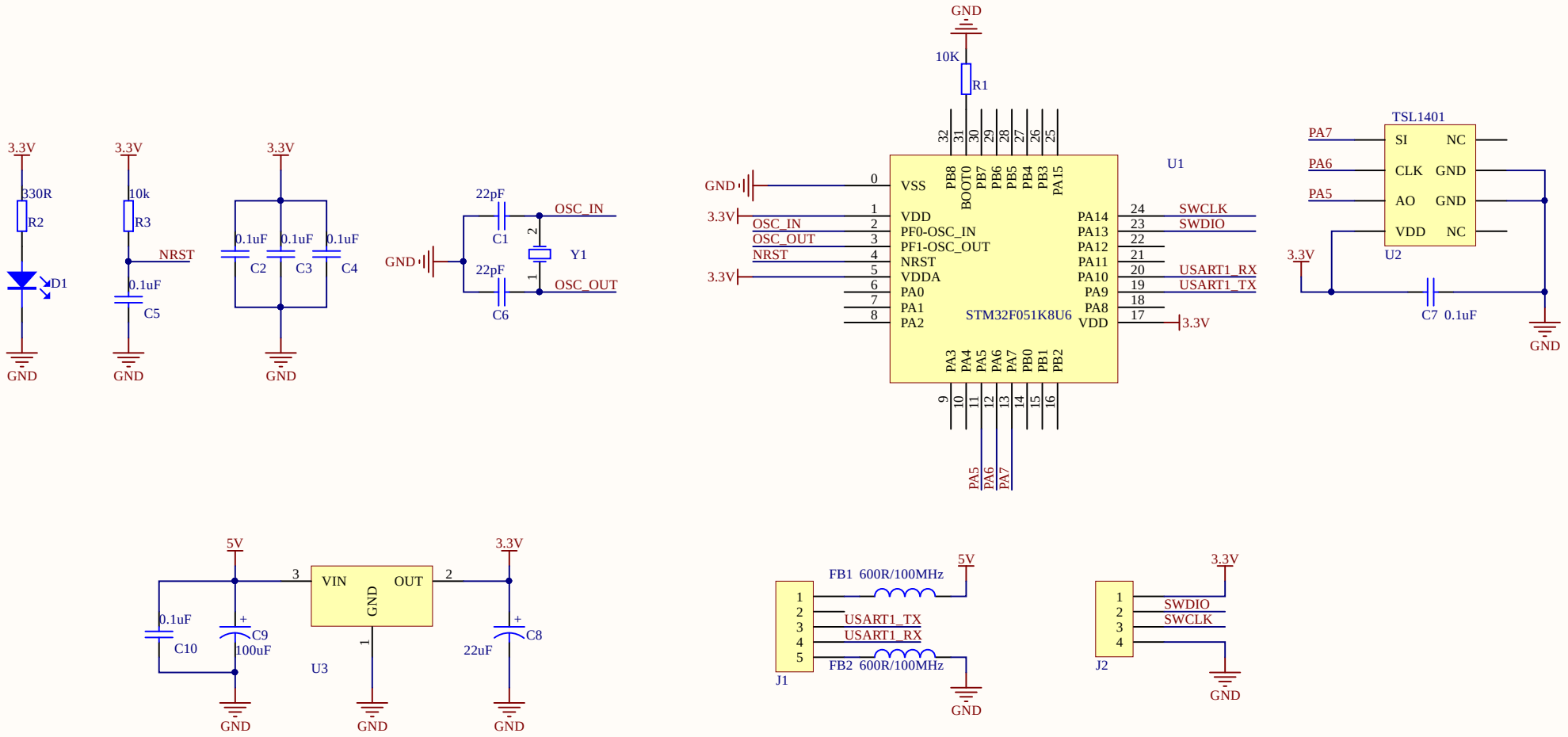

Title		
Size A4	Number	Revision
Date: 2018-01-17		Sheet of
File: C:\Users\..\FS_Explorer_ccd.SchDoc		Drawn By: