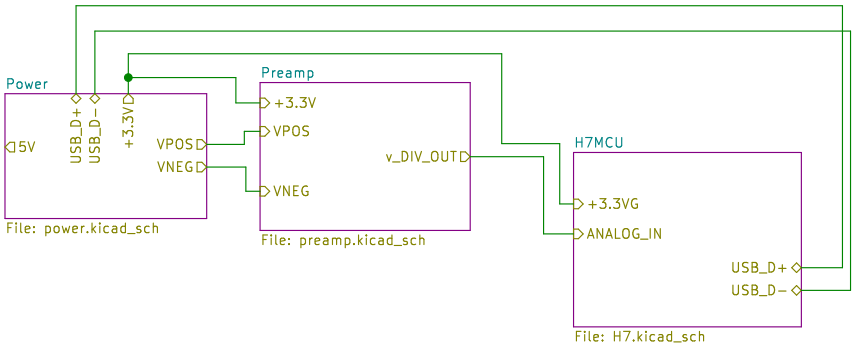
Power
5V
USB_D+
USB_D−
+3.3V
VPOS
VNEG
File: power.kicad_sch
Preamp
+3.3V
VPOS
VNEG
v_DIV_OUT
File: preamp.kicad_sch
H7MCU
+3.3VG
ANALOG_IN
USB_D+
USB_D−
File: H7.kicad_sch

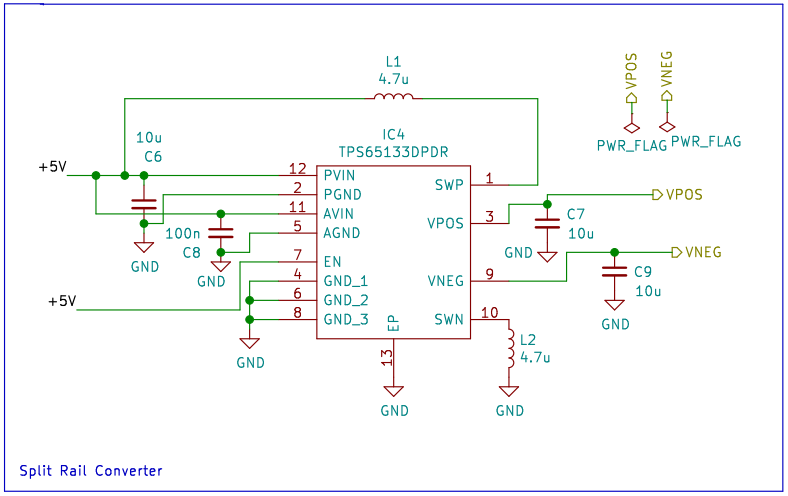
L1
4.7u
IC4
TPS65133DPDR
PVIN
PGND
AVIN
AGND
EN
GND_1
GND_2
GND_3
EP
SWP
VPOS
VNEG
SWN
+5V
10u
C6
100n
C8
GND
C7
10u
C9
10u
L2
4.7u
VPOS
VNEG
PWR_FLAG
Split Rail Converter

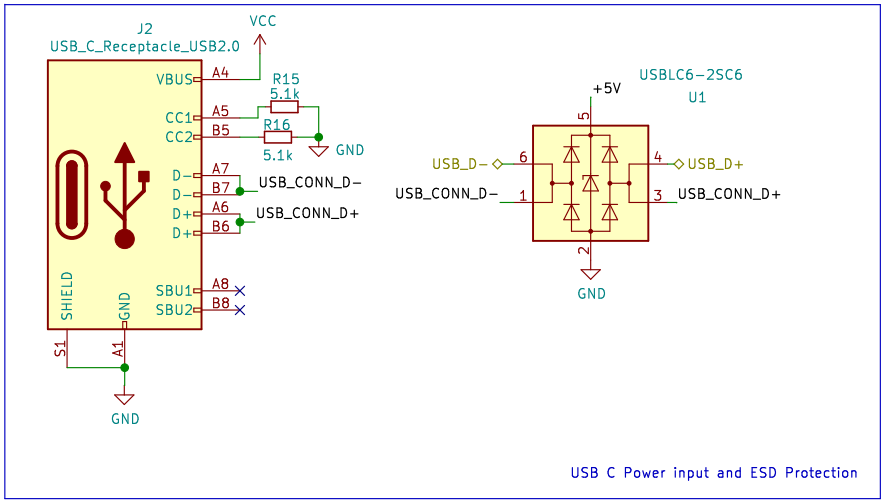
J2
USB_C_Receptacle_USB2.0
VCC
VBUS
CC1
CC2
D−
D−
D+
D+
SHIELD
GND
SBU1
SBU2
R15
5.1k
R16
5.1k
GND
USB_CONN_D−
USB_CONN_D+
S1
A1
USBLC6−2SC6
U1
+5V
USB_D−
USB_D+
USB_CONN_D−
USB_CONN_D+
USB C Power input and ESD Protection

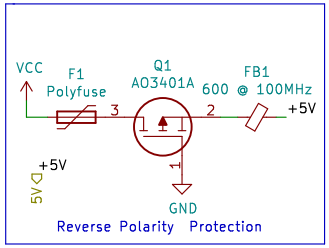
VCC
F1
Polyfuse
Q1
AO3401A
FB1
600 @ 100MHz
+5V
5V
GND
Reverse Polarity Protection

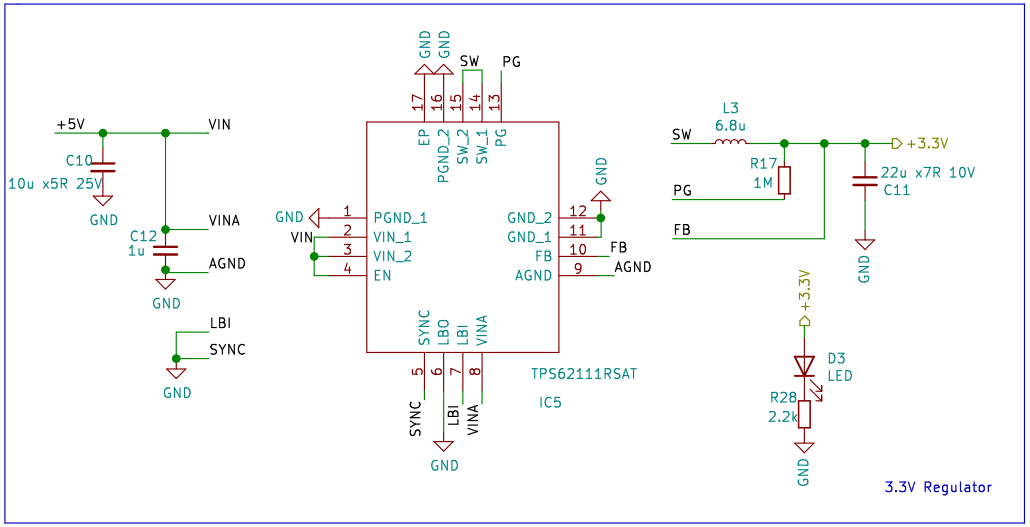
+5V
VIN
C10
10u x5R 25V
GND
VINA
C12
1u
AGND
LBI
SYNC
PGND_1
VIN_1
VIN_2
EN
GND_2
GND_1
FB
AGND
EP
PGND_2
SW_2
SW_1
PG
SYNC
LBO
LBI
VINA
TPS62111RSAT
IC5
SW
PG
L3
6.8u
+3.3V
R17
1M
22u x7R 10V
C11
D3
LED
R28
2.2k
3.3V Regulator

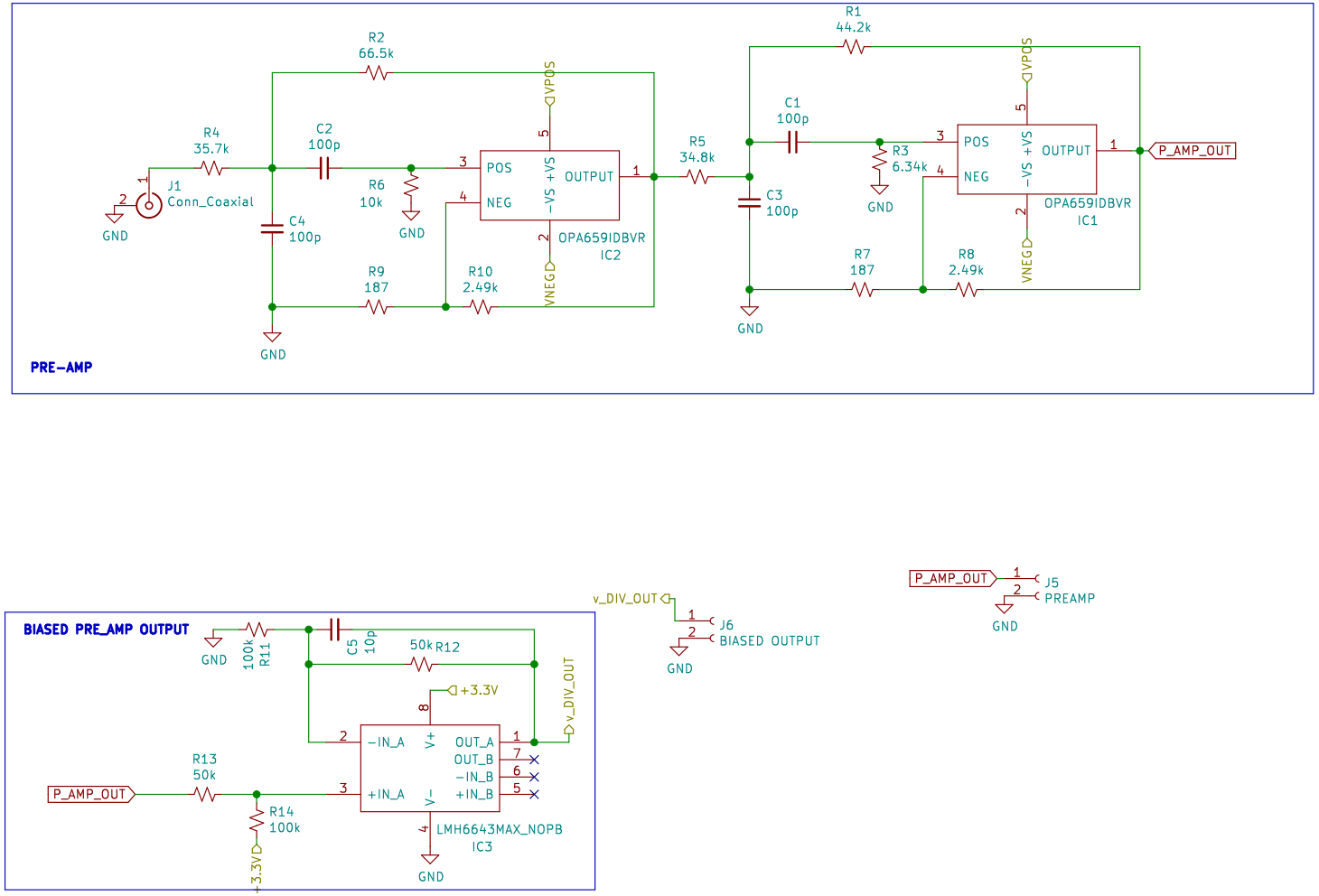
PRE-AMP
R1
44.2k
R2
66.5k
R3
6.34k
R4
35.7k
R5
34.8k
R6
10k
R7
187
R8
2.49k
R9
187
R10
2.49k
C1
100p
C2
100p
C3
100p
C4
100p
J1
Conn_Coaxial
GND
VPOS
VNEG
POS
NEG
OUTPUT
+VS
−VS
OPA659IDBVR
IC1
OPA659IDBVR
IC2
P_AMP_OUT
BIASED PRE_AMP OUTPUT
R11
100k
C5
10p
R12
50k
+3.3V
v_DIV_OUT
R13
50k
R14
100k
−IN_A
+IN_A
V+
V−
OUT_A
OUT_B
−IN_B
+IN_B
LMH6643MAX_NOPB
IC3
J6
BIASED OUTPUT
J5
PREAMP

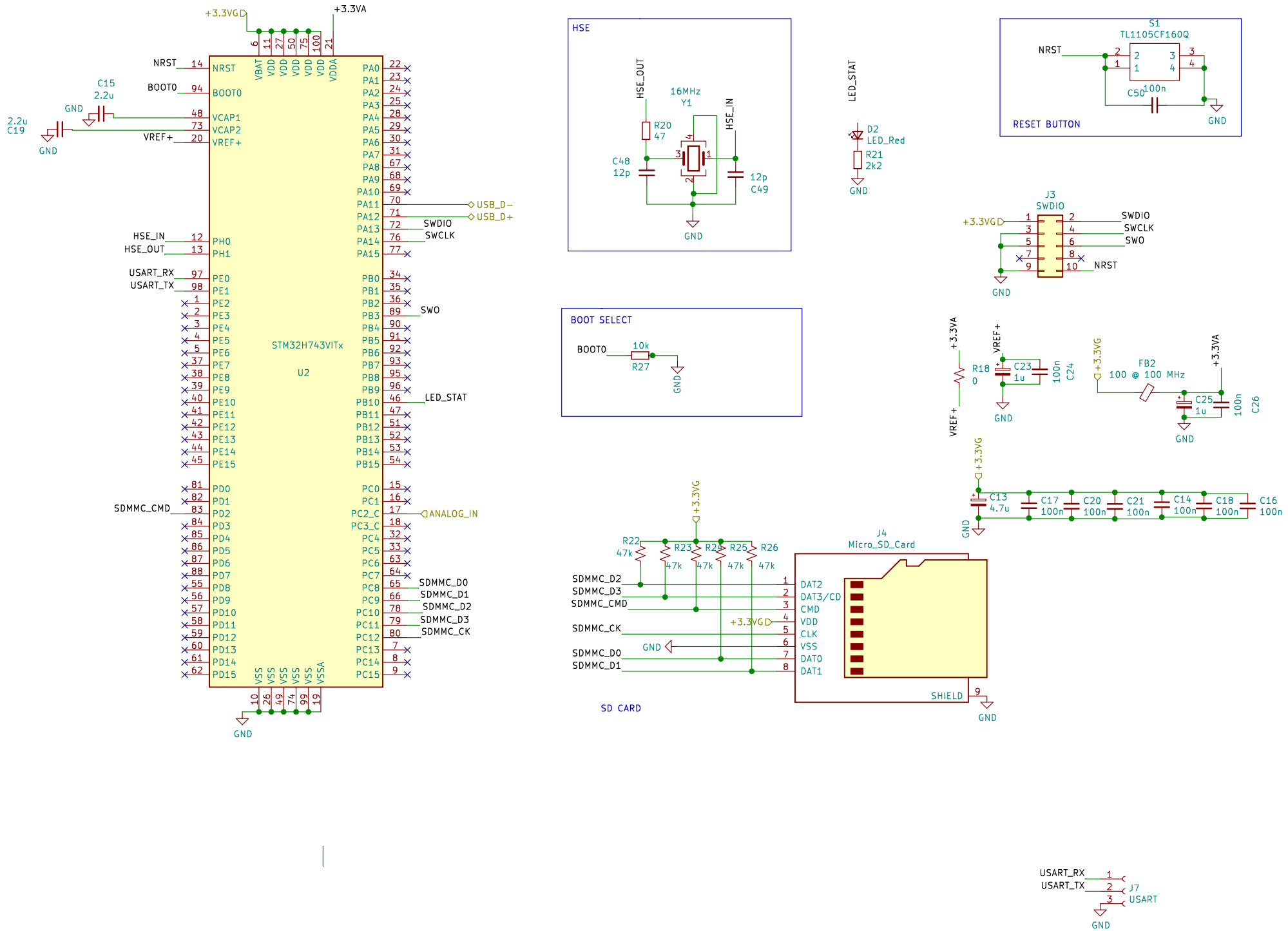
STM32H743VITx
U2
+3.3VG
+3.3VA
NRST
BOOT0
VCAP1
VCAP2
VREF+
C15
2.2u
C19
2.2u
GND
HSE_IN
HSE_OUT
USART_RX
USART_TX
SDMMC_CMD
USB_D−
USB_D+
SWDIO
SWCLK
SWO
LED_STAT
ANALOG_IN
SDMMC_D0
SDMMC_D1
SDMMC_D2
SDMMC_D3
SDMMC_CK
VBAT
VDD
VDDA
VSS
VSSA
HSE
HSE_OUT
16MHz
Y1
HSE_IN
R20
47
C48
12p
12p
C49
LED_STAT
D2
LED_Red
R21
2k2
S1
TL1105CF160Q
C50
100n
RESET BUTTON
J3
SWDIO
BOOT SELECT
BOOT0
10k
R27
R18
0
C23
1u
C24
100n
FB2
100 @ 100 MHz
C25
1u
C26
100n
C13
4.7u
C17
100n
C20
100n
C21
100n
C14
100n
C18
100n
C16
100n
R22
47k
R23
47k
R24
47k
R25
47k
R26
47k
J4
Micro_SD_Card
DAT2
DAT3/CD
CMD
VDD
CLK
VSS
DAT0
DAT1
SHIELD
SD CARD
J7
USART