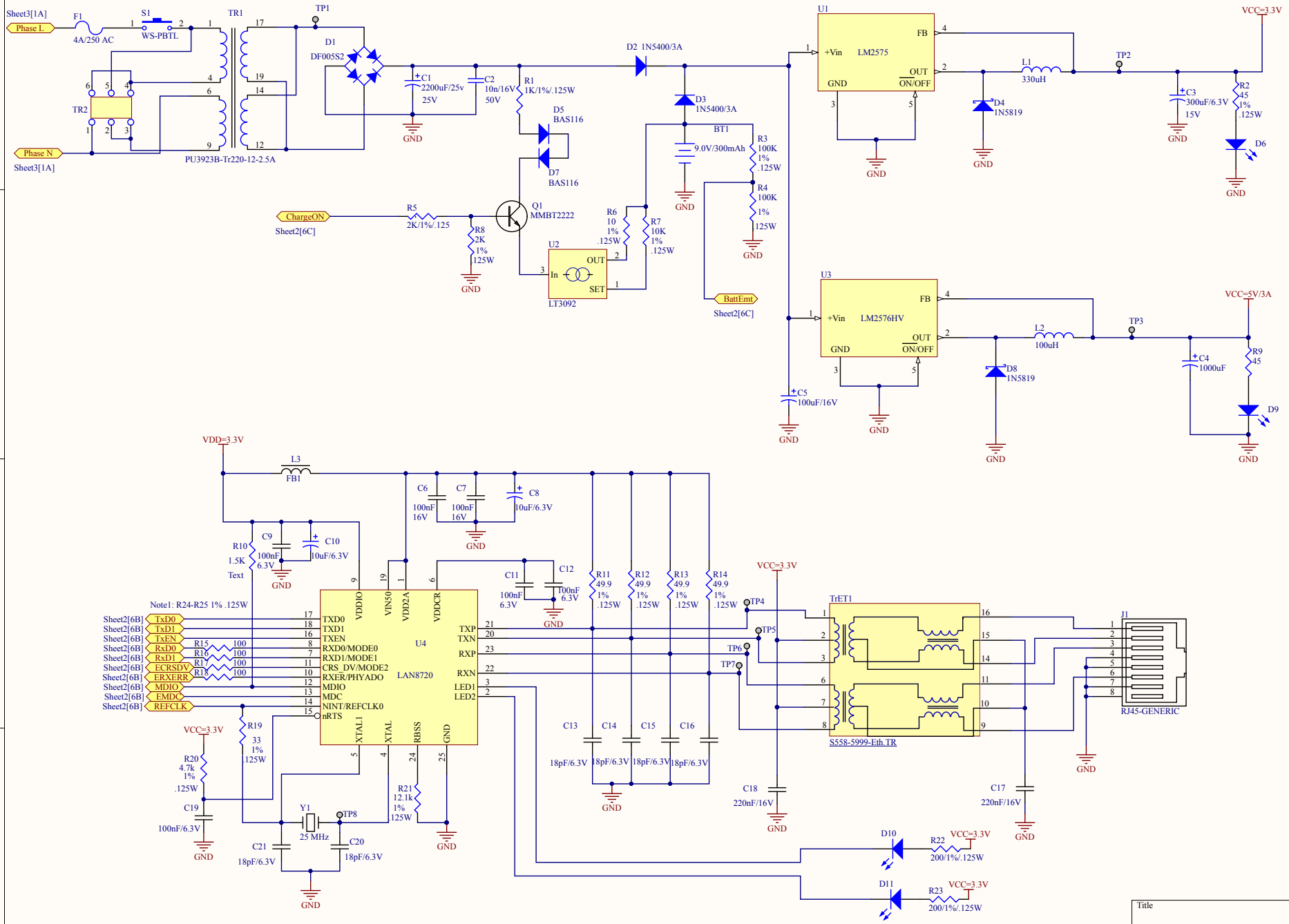

Title		
Size A3	Number	Revision
Date: 1.4.2016 r.	Sheet of	
File: D:\SmartMeter-AltiumProject-01\...Sheet1.SchDoc	Drawn By:	

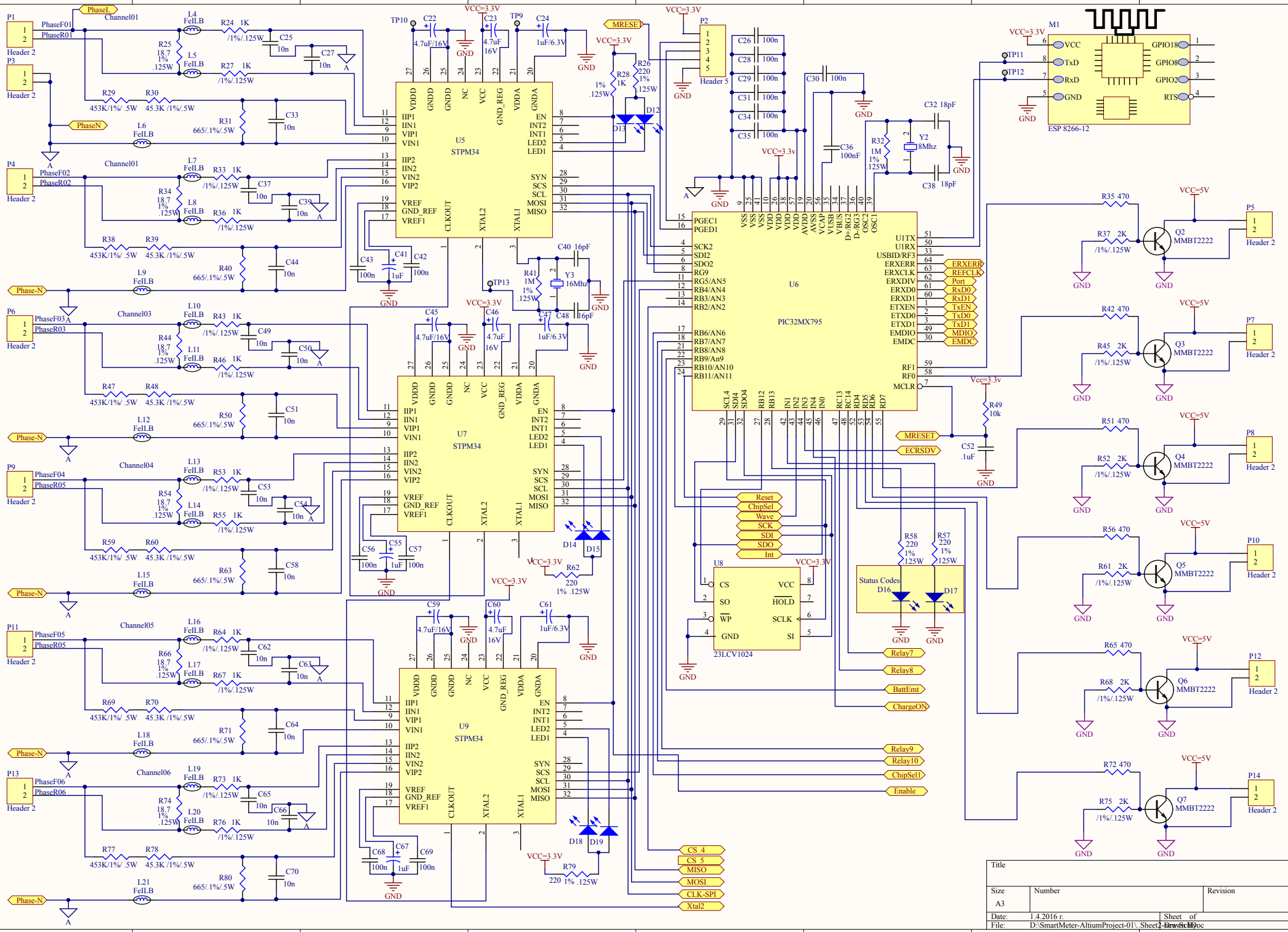

U5
STPM34
U7
STPM34
U9
STPM34
U6
PIC32MX795
U8
23LCV1024
M1
ESP 8266-12
Status Codes
Channel01
Channel03
Channel04
Channel05
Channel06
Header 2
Header 5
Phase-N
Phase-L
PhaseN
MRESET
ECRSDV
Reset
ChipSel
Wave
SCK
SDI
SDO
Int
Relay7
Relay8
BattEmt
ChargeON
Relay9
Relay10
ChipSel1
Enable
CS_4
CS_5
MISO
MOSI
CLK-SPI
Xtal2
VCC=3.3V
VCC=5V
Title
Size
A3
Number
Revision
Date: 1.4.2016 r.
File: D:\SmartMeter-AltiumProject-01\..Sheet2-Draw.SchDoc
Sheet of

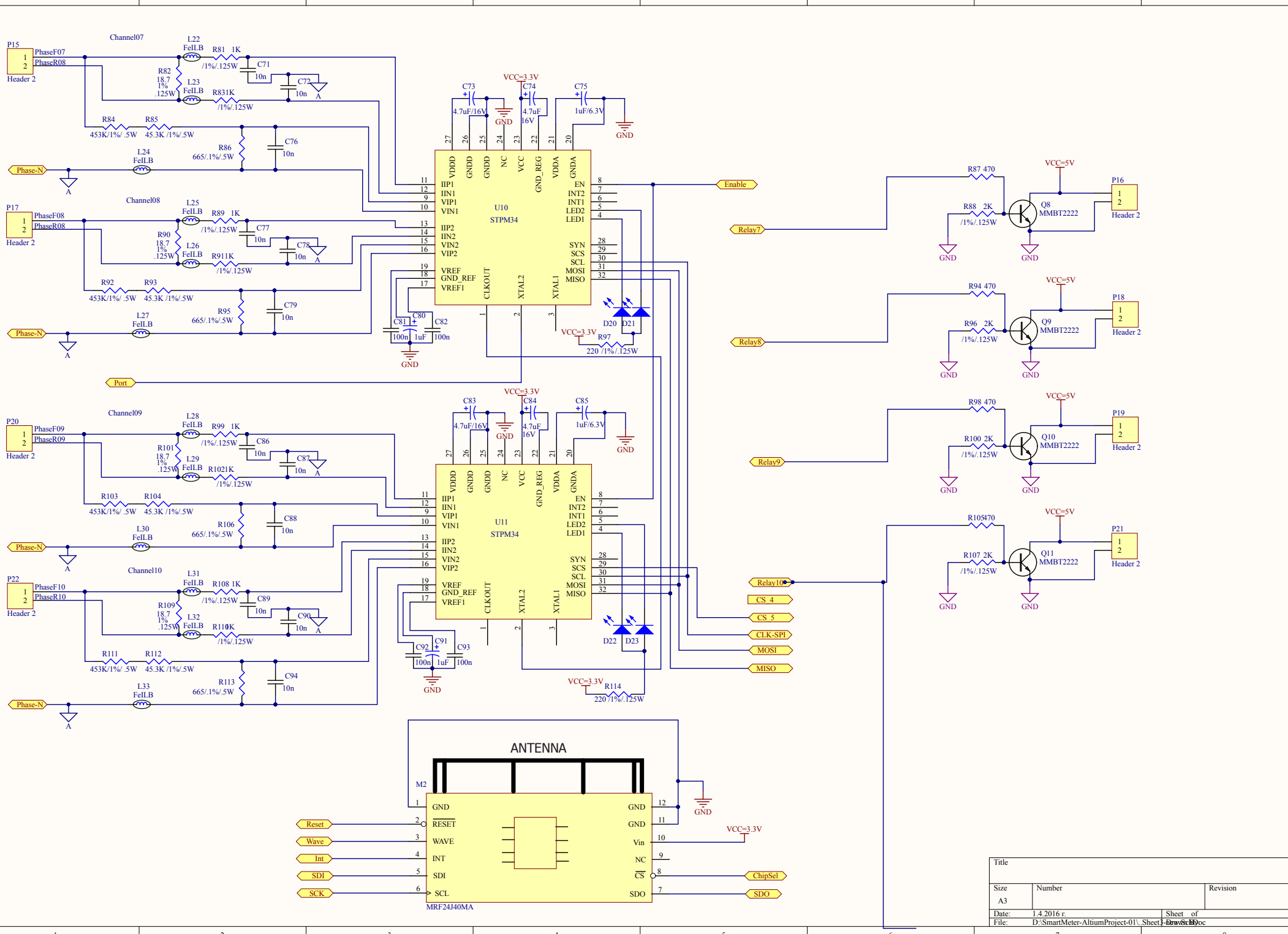
Channel07
P15
PhaseF07
PhaseR08
Header 2
L22
FeILB
R81 1K
/1%/.125W
C71
10n
C72
10n
R82
18.7
1%
.125W
L23
FeILB
R831K
/1%/.125W
R84
453K/1%/ .5W
R85
45.3K /1%/.5W
C76
10n
R86
665/.1%/.5W
L24
FeILB
Phase-N
Channel08
P17
PhaseF08
PhaseR08
Header 2
L25
FeILB
R89 1K
/1%/.125W
C77
10n
C78
10n
R90
18.7
1%
.125W
L26
FeILB
R911K
/1%/.125W
R92
453K/1%/ .5W
R93
45.3K /1%/.5W
C79
10n
R95
665/.1%/.5W
L27
FeILB
Phase-N
Port
VCC=3.3V
C73
4.7uF/16V
C74
4.7uF
16V
C75
1uF/6.3V
GND
U10
STPM34
VDDD
GNDD
GNDD
NC
VCC
GND_REG
VDDA
GNDA
IIP1
IIN1
VIP1
VIN1
IIP2
IIN2
VIN2
VIP2
VREF
GND_REF
VREF1
CLKOUT
XTAL2
XTAL1
EN
INT2
INT1
LED2
LED1
SYN
SCS
SCL
MOSI
MISO
C80
C81
100n
1uF
C82
100n
D20
D21
R97
220 /1%/.125W
Enable
Relay7
Relay8
Relay9
Relay10
CS_4
CS_5
CLK-SPI
MOSI
MISO
R87 470
R88 2K
/1%/.125W
Q8
MMBT2222
P16
Header 2
R94 470
R96 2K
/1%/.125W
Q9
MMBT2222
P18
Header 2
R98 470
R100 2K
/1%/.125W
Q10
MMBT2222
P19
Header 2
R105470
R107 2K
/1%/.125W
Q11
MMBT2222
P21
Header 2
VCC=5V
Channel09
P20
PhaseF09
PhaseR09
Header 2
L28
FeILB
R99 1K
/1%/.125W
C86
10n
C87
10n
R101
18.7
1%
.125W
L29
FeILB
R1021K
/1%/.125W
R103
453K/1%/ .5W
R104
45.3K /1%/.5W
C88
10n
R106
665/.1%/.5W
L30
FeILB
Phase-N
Channel10
P22
PhaseF10
PhaseR10
Header 2
L31
FeILB
R108 1K
/1%/.125W
C89
10n
C90
10n
R109
18.7
1%
.125W
L32
FeILB
R110K
/1%/.125W
R111
453K/1%/ .5W
R112
45.3K /1%/.5W
C94
10n
R113
665/.1%/.5W
L33
FeILB
Phase-N
C83
4.7uF/16V
C84
4.7uF
16V
C85
1uF/6.3V
U11
STPM34
C92
100n
C91
1uF
C93
100n
D22
D23
R114
220 /1%/.125W
ANTENNA
M2
GND
RESET
WAVE
INT
SDI
SCL
Vin
NC
CS
SDO
Reset
Wave
Int
SDI
SCK
ChipSel
SDO
MRF24J40MA
Title
Size
A3
Number
Revision
Date:
1.4.2016 r.
Sheet of
File:
D:\SmartMeter-AltiumProject-01\..Sheet1.SchDoc
Drawn By:

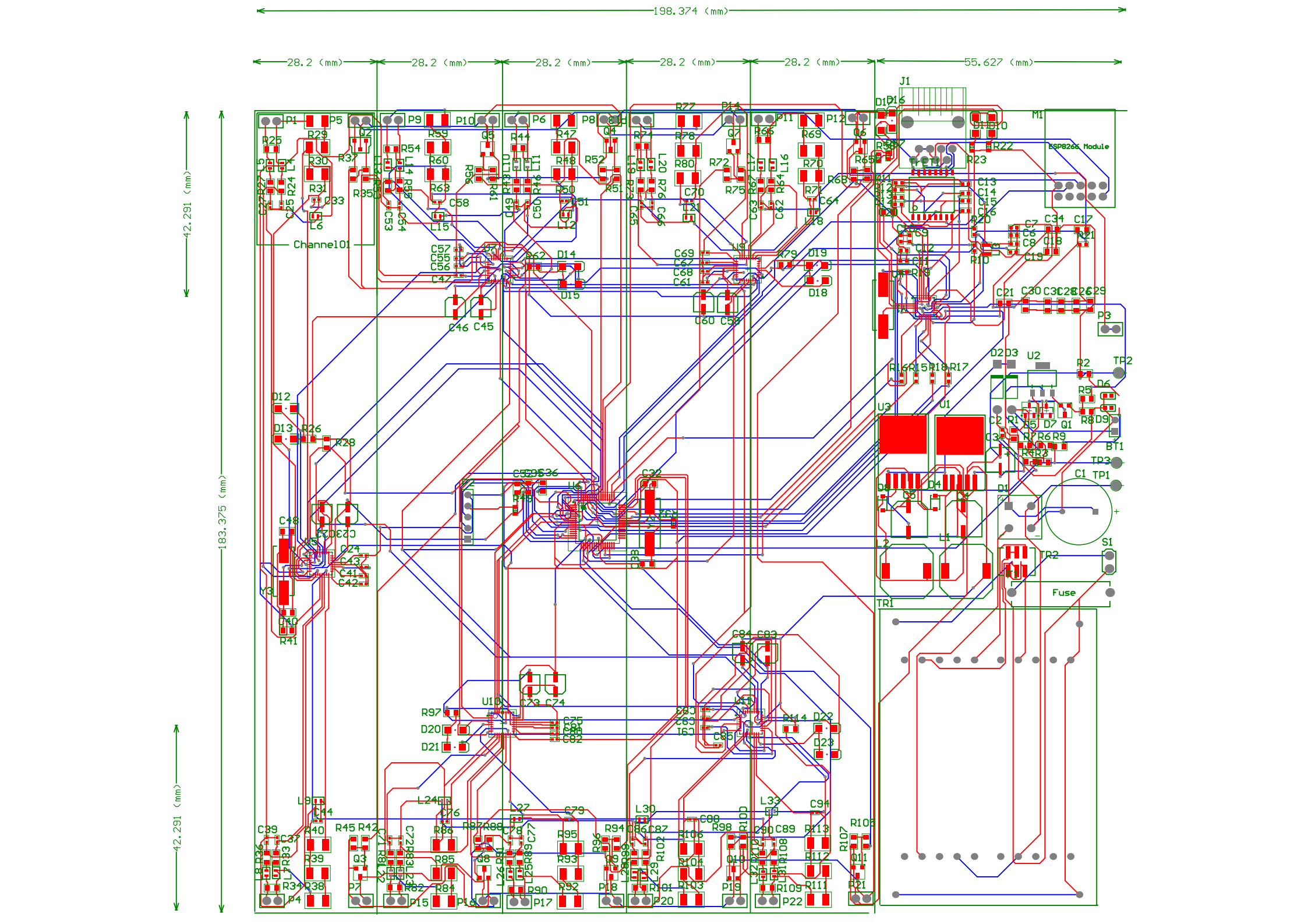
198.374 (mm)
28.2 (mm)
28.2 (mm)
28.2 (mm)
28.2 (mm)
28.2 (mm)
55.627 (mm)
42.291 (mm)
183.375 (mm)
42.291 (mm)
Channel01
ESP8266 Module
Fuse

Comment	Designator	Footprint	Price	Quantity
AGND	1	HC49/4H_SMX		1
9.0V/300mAh	BT1	BAT-2	1	1
2200uF/25v	C1	2200uF-Nichicon	0.385	1
10n/16V	C2	0603C-GENERIC	.049	1
300uF/6.3V	C3	300uF-6.3V Vishay	1.5	1
1000uF	C4	1000uF/16V	1.5	1
100uF/16V	C5	100uF/16V	1.5	1
100nF	C6, C7, C9, C11, C12	0603C-GENERIC	0.1	5
10uF/6.3V	C8	0603C-GENERIC	.036	1
10uF/6.3V	C10	C0805	.036	1
18pF/6.3V	C13, C14, C15, C16	0603C-GENERIC	.03	4
220nF/16V	C17, C18	0805C-TBD	.0096	2
100nF/6.3V	C19	0603C-GENERIC	0.1	1
18pF/6.3V	C20, C21	0805C-TBD	.03	2
4.7uF/16V	C22, C45, C59, C73, C83	4.7uF-Nichicon	.065	5
4.7uF	C23, C46, C60, C74, C84	4.7uF-Nichicon	.065	5
1uF/6.3V	C24, C47, C61, C75	C0805	.05	4
10n	C25, C33, C37, C44, C49, C51, C53, C58, C62, C64, C65, C70, C71, C76, C77, C79, C86, C88, C89, C94	0402C-GENERIC	.002	20
100n	C26, C28, C29, C30, C31, C34, C35, C42	0805C-TBD		8
10n	C27, C39, C50, C54, C63, C66, C72, C78, C87, C90	0402R-GENERIC	.002	10
18pF	C32, C38	0805C-TBD		2
100nF	C36	0805C-TBD		1
16pF	C40, C48	0805C-TBD	.00987	2
1uF	C41	C0805	.05	1
100n	C43, C56, C57, C68, C69, C81, C82, C92, C93	0402C-GENERIC		9
.1uF	C52	0805C-TBD	.00206	1
1uF	C55, C67, C80, C91	0402C-GENERIC	.05	4
1uF/6.3V	C85	0402C-GENERIC	.05	1
DF005S2	D1	D-38	0.24	1
1N5400/3A	D2, D3	DO-41	.142	2
1N5819	D4, D8	SOD123-diodes	.08	2
BAS116	D5, D7	SOT-23_N	.06	2
LED2	D6, D9	LED-SM	.04	2
LED2	D10, D11, D12, D13, D14, D15, D16, D17, D18, D19, D20, D21, D22, D23	3.2X1.6X1.1	.04	14
4A/250 AC	F1	FuseHolder - duplicate	.25	1
RJ45-GENERIC	J1	RJ45-8/8		1
330uH	L1	Coil300uF-MSS1038	.82	1
100uH	L2	Coil300uF-MSS1038	.82	1
FB1	L3	TOKO-DFE252012C-1U	.288	1
FeILB	L4, L5, L6, L7, L8, L9, L10, L11, L12, L13, L14, L15, L16, L17, L18, L19, L20, L21, L22, L23, L24, L25, L26, L27, L28, L29, L30, L31, L32, L33	FerriteBead-0603	.027	30
ESP 8266-12	M1	ESP_1		1
MRF24J40MA	M2		6.08	1
Header 2	P1, P3, P4, P5, P6, P7, P8, P9, P10, P11, P12, P13, P14, P15, P16, P17, P18, P19, P20, P21, P22	BG090-header		21
Header 5	P2	HDR1X5		1
MMBT2222	Q1, Q2, Q3, Q4, Q5, Q6, Q7, Q8, Q9, Q10, Q11	SOT23-BCE	.03	11
1K/1%/.125W	R1	0805R-10		1
45	R2, R9	0805R-68		2
100K	R3, R4	0805R-0R1	.0035	2
2K/1%/.125	R5	0805R-10	.0035	1
10	R6	0805R-12	.0035	1
10K	R7, R49	J1-0603	.0035	2
2K	R8	0805R-12	.0035	1
1.5K	R10	0603R-0R	.00266	1
49.9	R11, R12, R13, R14	0603R-0R	.0026	4
100	R15, R16, R17, R18	0603R-0R	.1	4
33	R19	0603R-0R	.1	1
4.7k	R20	0603R-0R	.1	1
12.1k	R21	0603R-0R	.1	1
200/1%/.125W	R22, R23	J1-0603	.00266	2
1K	R24, R27, R28, R33, R36, R43, R46, R53, R55, R64, R67, R73, R76, R81, R83, R89, R91, R99, R102, R108, R110	0805C-GENERIC	.00266	21
18.7	R25, R34, R44, R54, R66, R74, R82, R90, R101, R109	0805R-10	.05	10
220	R26, R97, R114	0805C-GENERIC	.0027	3
453K/1%/ .5W	R29, R38, R47, R59, R69, R77, R84, R92, R103, R111	1210R-GENERIC	.055	10
45.3K /1%/.5W	R30, R39, R48, R60, R70, R78, R85, R93, R104, R112	1210C-GENERIC	.035	10
665/.1%/.5W	R31, R40, R50, R63, R71, R80, R86, R95, R106, R113	1210C-GENERIC	.02	10
1M	R32	J1-0603	.0027	1
470	R35, R42, R51, R56, R65, R72, R87, R94, R98, R105	0805R-39	.003	10
2K	R37, R45, R52, R61, R68, R75, R88, R96, R100, R107	0805R-180	.033	10
1M	R41	0805FB-GENERIC	.0027	1
220	R57, R58	J1-0603	.0027	2
220	R62, R79	0805R-10	.0027	2
WS-PBTL	S1	PowerSwitch220v/5A		1
TESTPOINT	TP1, TP2, TP3, TP4, TP5, TP6, TP7, TP8, TP9, TP10, TP11, TP12, TP13	TESTPOINT		13
PU3923B-Tr220-12-2.5A	TR1	Transform220/110-12/3		1
Tr-Switch	TR2	6-pins Molex2x3-5Ahm		1
S558-5999-Eth.TR	TrET1	S558-5999-Ethtransf		1
LM2575	U1	TO_263/KTT	.96	1
LT3092	U2	LT3092	2.36	1
LM2576HV	U3	TO-263/KTT	.96	1
LAN8720	U4	QFN24_4X4_N	.76	1
STPM34	U5, U7, U9, U10, U11	32M1-A_M	1.16	5
PIC32MX795	U6	TQFP-PT64_N	5.16	1
23LCV1024	U8			1
25 MHz	Y1	XTAL-RU49/4	.4288	1
8Mhz	Y2	R38	.137	1
16Mhz	Y3	R38	.288	1