Lucerne University of
Applied Sciences and Arts
HOCHSCHULE
LUZERN
Technik & Architektur

INTRO Zumo Robot

Hardware & Assembly Guide

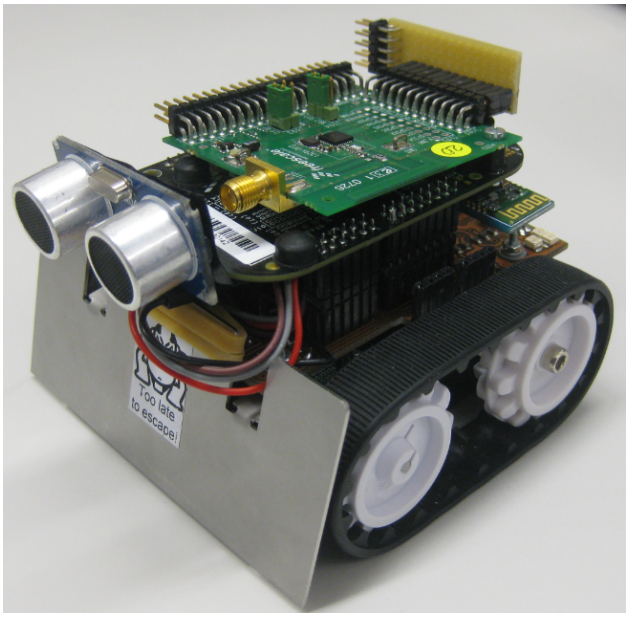

Autor:
Erich Styger, CC Electronics
erich.styger@hslu.ch

September 27, 2013

Revision History

Revision	Date	Author(s)	Description
0.01	24-Sep-13	ES	Initial version with LaTeX.
0.02	25-Sep-13	ES	Added schematic information.
0.03	26-Sep-13	ES	FRDM assembly instructions.
0.04	27-Sep-13	ES, AA	References and Zumo Base Board assembly instructions.

Contents

1 Overview **1**

2 Schematic **3**
2.1 Power Supply 4
2.2 Decoupling 4
2.3 Power On/Off 4
2.4 FRDM-KL25Z Header 6
2.5 User Button 7
2.6 User LED 7
2.7 Buzzer 7
2.8 Position Encoder 8
2.9 Motor Driver 9
2.10 Ultrasonic Sensor 11
2.11 Reflectance Sensor Array 13
2.12 Bluetooth 14
2.13 MC1320x Transceiver 16
2.14 nRF24L01+ Transceiver 17
2.15 User Sensors 18
2.16 I2C Connector 20

3 Layout **23**

4 FRDM Board **25**
4.1 Arduino Headers 25
4.2 FRDM-KL25Z Jumpers 27

5 Zumo Base Board **29**
5.1 Material 29
5.2 Mounting Surface Mounted Devices (SMD) 30
5.3 Schottky Diode 32
5.4 Z-Diode 33
5.5 LED 33
5.6 Electrolyte Capacitors 35
5.7 Mounting Through Hole Technology (THT) Devices 36

6 Appendix **37**
6.1 INTRO Robo Base Board Schematics 37
6.2 INTRO Zumo Base Board Layout 39
6.3 Pin Mapping 44
6.4 Zumo Base Board Bill Of Material 48

6.5 FRDM-KL25Z RevD Schematics 52
6.6 FRDM-KL25Z RevE Schematics 56

Bibliography **61**

1 Overview

This section describes the Printed Circuit Board (PCB) used for the robot. The PCB has sockets for the following components:

- Zumo Chassis Kit: Pololu #1418[11]
- Two 75:1 Micro Metal Gearmotors: Pololu #2361[5]
- Motor H-Bridge DRV8835 module: Pololu #2135[8]
- Zumo Blade: Pololu #1410[10]
- Zumo Reflectance Sensor Array: Pololu #1419[12]
- Two Position Quadrature Encoder: Pololu #1217[9]
- Four digital sensor slots: e.g. Pololu #1132[1], Pololu #1134[7], Pololu #2460[2], Pololu #2461[3]
- 5V DC/DC Converter Pololu #2119[4]
- 9V DC/DC Converter Pololu #2116[6]
- Freescale FRDM-KL25Z board
- I^2C Module Slot

The board has been designed around the FRDM-KL25Z board, but technically other FRDM boards (like the FRDM-KL46Z) could be used (although not verified).

2 Schematic

This section presents the details of the schematics. The full schematics is found in the Appendix (see section 6.1). The schematics has the following main components:

- **Power Supply**: On board battery connector with two DC/DC converters.
- **Decoupling**: Capacitors for voltage stabilization.
- **On/Off Switch**: Switches to turn on or off system power.
- **FRDM Header**: Connectors to the FRDM board.
- **User Button**: Push button for application usage.
- **LED**: LED for application usage.
- **Buzzer**: Sounder for audible feedback.
- **Encoder**: Connector for quadrature position encoders.
- **Motor Driver**: Connector for H-Bridge DC motor driver.
- **Ultrasonic**: Connector for ultrasonic distance sensor module.
- **Reflectance Sensor**: Connector for a IR reflectance sensor module.
- **Bluetooth**: Connector for Bluetooth module.
- **MC1320x**: Connector for Freescale IEEE802.16.4 transceiver module.
- **nRF24L01+**: Connector for 2.4 GHz transceiver module from Nordic Semiconductor.
- **Sensors**: four connectors for digital sensor modules.
- **I^{2}C**: Connector for I^{2}C modules.

2.1 Power Supply

Main power is provided by the batteries of the robot (4 AA batteries). From the battery voltage a 9V is created with a DC/DC converter (Figure 1). That way the motors have a constant voltage, and the control loop does have to compensate for different voltage levels. Because the devices like Bluetooth module require 5V supply voltage, another DC/DC converter generates 5V. The 3.3V is generated from the battery voltage on the FRDM board.

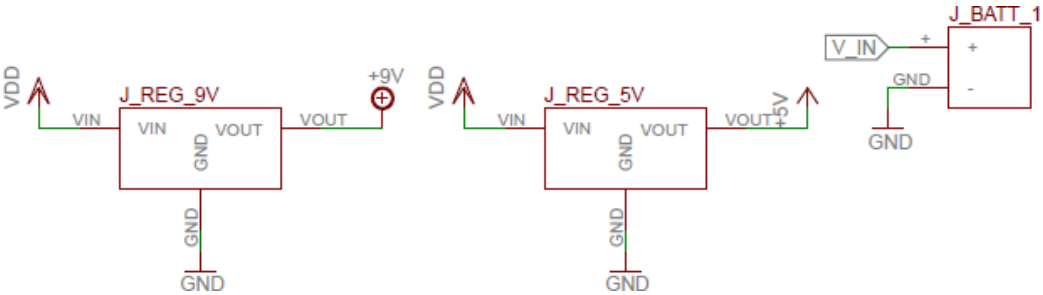

Figure 1: Battery Power and DC/DC Converters

2.2 Decoupling

Series of capacitors (Figure 2) are used to stabilize and decouple the different supply voltages (3.3V, 5V, 9V and battery voltage). They are needed as especially the motors are drawing high currents.

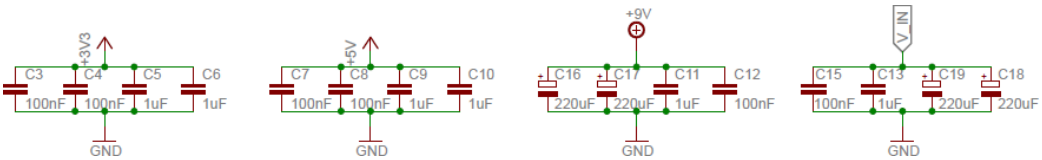

Figure 2: Power Decoupling

2.3 Power On/Off

There is a push button for turning on power, and another one to turn it off (Figure 3). The dotted or broken lines of the transistor symbols indicates that they are normally 'OFF' enhancement FET's:

- The side with the arrow is the source, the other is the drain.
- The gate-source voltage controls if the transistor is ON or OFF.
- No current can flow if a zero gate-source voltage is is applied.

- For the *N-Type*, the transistor is ON for a *positive* gate-source voltage.
- For the *P-Type*, the transistor is ON for a *negative* gate-source voltage.

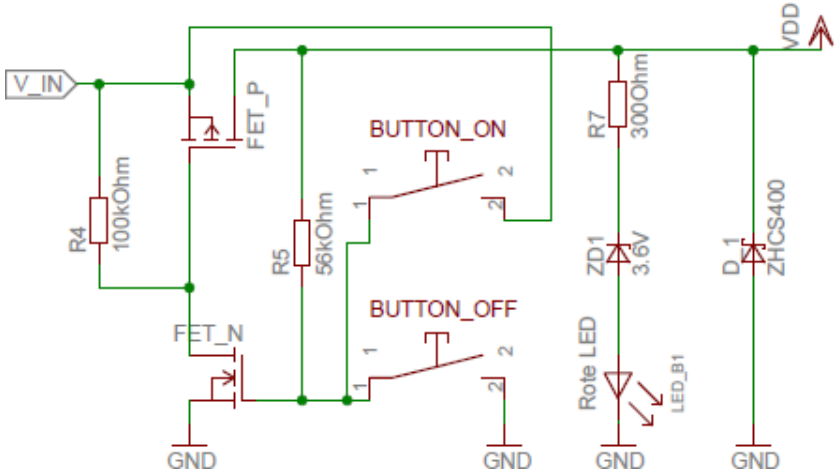

Figure 3: Power On/Off

- `V_IN`: battery voltage.
- `VDD`: output of the circuit.
- `BUTTON_ON`: pushing the button and releasing it turns `VDD` on:
  1. With both switches off, `R4` acts as a pull-up resistor for the gate of `FET_P`. As there is no zero gate-source voltage, the transistor is off.
  2. The gate of `FET_N` is at `GND` voltage, thus `FET_N` is OFF.
  3. Pressing the `BUTTON_ON` will create a positive voltage on the gate of the `FET_N`. That positive voltage from gate to source of `FET_N` turns the transistor on.
  4. With the `FET_N` on, this pulls the gate voltage of `FET_P` to `GND`, causing a negative gate-source voltage for `FET_P`. this negative voltage turns the `FET_N` ON.
  5. With the current flowing to `VDD`, `R5` acts as a pull-up resistor. This ensures that the gate of `FET_N` keeps a positive voltage to have `FET_N` in ON state, even if the `BUTTON_ON` gets released.
- `BUTTON_OFF`: pushing the button and releasing it turns `VDD` off:

1. Closing `BUTTON_OFF` will apply `GND` voltage to `FET_N`, turning it OFF.
2. With this, `R4` acts as pull-up resistor and brings the gate of `FET_P` to `V_IN` level. With no source-gate voltage difference, `V_IN` is OFF.

- `LED`: used as battery voltage indicator: with the voltage drop of about 1V and the voltage drop of 3.6V of the diode this means that the `LED` will be turned on if the battery voltage is above 4.7V.
- `D_1`: this diode acts as a reverse voltage protection.

Shortcut protection is similar to pressing `BUTTON_OFF`: A shortcut between `VDD` and `GND` will get the gate of `FET_N` to `GND`, turning the FET OFF, and this then will turn `FET_P` OFF too.

2.4 FRDM-KL25Z Header

The board has 4 dual row headers to interface with a FRDM board (Figure 4). The pin assignment of the FRDM board is 'Arduino like', but uses dual row headers. The FRDM board will be placed with the processor downside to the PCB. Two capacitors (C21 and C22) are added for voltage stabilization with a diode to prevent over voltage situations, as the FRDM board only can take up to 9V on the VIN pin.

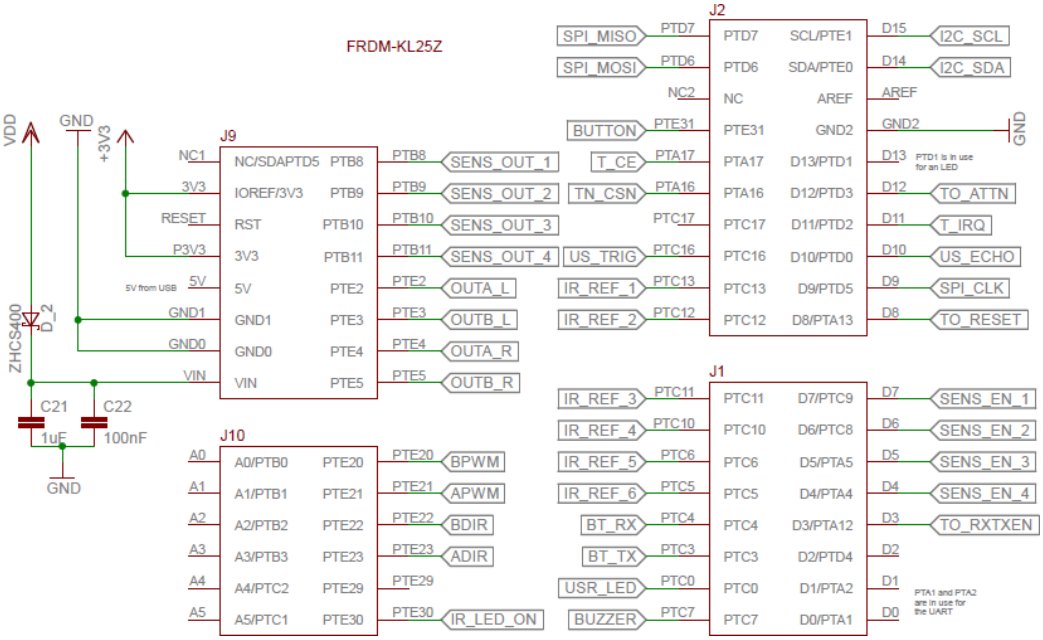

Figure 4: Interface Headers to FRDM Board

2.5 User Button

The FRDM-KL25Z has a reset button which could be re-assigned as user button. But with the FRDM board mounted on the robot downside, it is not easily accessible. For this the PCB has a push button (Figure 5) with pull-up resistor and a capacitor for debouncing.

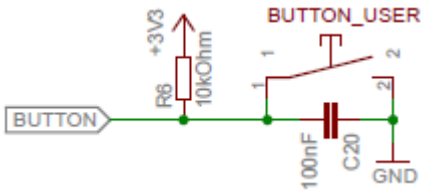

Figure 5: Button

2.6 User LED

Beside of the LED on the FRDM board, there is an additional LED available (Figure 6). This LED can be used by the application to indicate status of the system.

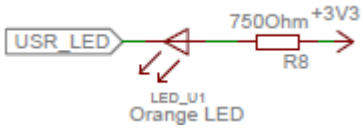

Figure 6: LED

2.7 Buzzer

The buzzer (Figure 7) is used by the robot to provide a sound. The buzzer needs a frequency signal, and the duty cycle and frequency determines the sound. The resistor `R10` is used to limit the sound level.

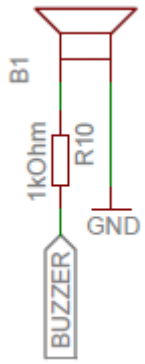

Figure 7: Buzzer

2.8 Position Encoder

Two quadrature encoder can be attached to the board (Figure 8), one for each side of the robot. Any quadrature encoder could be used, as long it is using 3.3V. Because the original Pololu Position Quadrature Encoder Pololu #1217[9] uses 5V, it needs to be modified for 3.3V operation and re-calibrated (see Adding Quadrature Encoder to the Zumo Chassis).

- `GND`: Ground.
- `VCC`: 3.3V supply voltage.
- `OUTA_L`: Left wheel A quadrature signal.
- `OUTB_L`: Left wheel A quadrature signal.
- `OUTA_R`: Right wheel A quadrature signal.
- `OUTB_R`: Right wheel A quadrature signal.

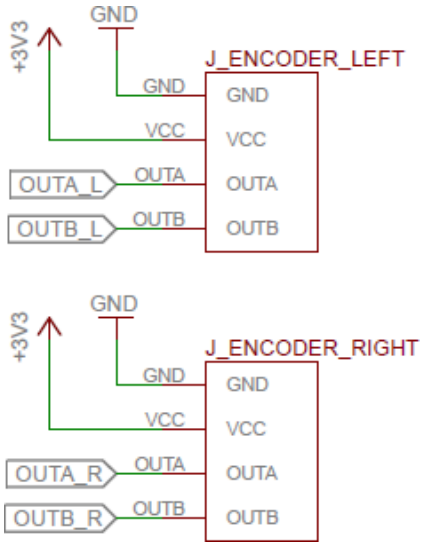

Figure 8: Encoder

2.9 Motor Driver

The board has a socket to plug in a Pololu 8835[8] Motor Driver board (Figure 9).

- `GND`: Ground.
- `VIN`: Motor power (9V). The voltage is provided generated by the 9V DC/DC converter from the battery voltage.
- `B_OUT2`, `B_OUT1`: Left motor output.
- `A_OUT2`, `A_OUT1`: Right motor output.
- `VMM`: Not used (would give access to the power supply after the reverse voltage protection MOSFET).
- `MODE`: With this pin pulled to HIGH, the H-Bride uses a simplified mode with direction and PWM signal.
- `A_IN1_PH`: Direction for right motor.
- `A_IN2_PH`: PWM signal for right motor.
- `B_IN1_PH`: Direction for left motor.
- `B_IN2_PH`: PWM signal for left motor.

- `VCC`: Logic supply voltage.

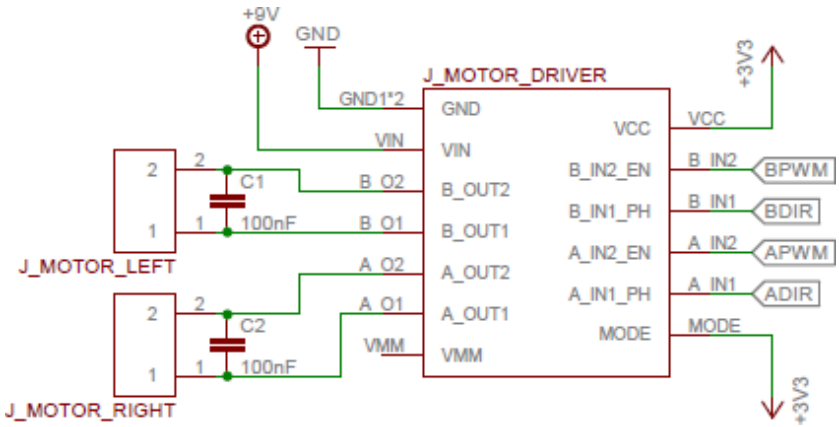

Figure 9: Motor Driver

Figure 10 and 11 shows an assembled module.

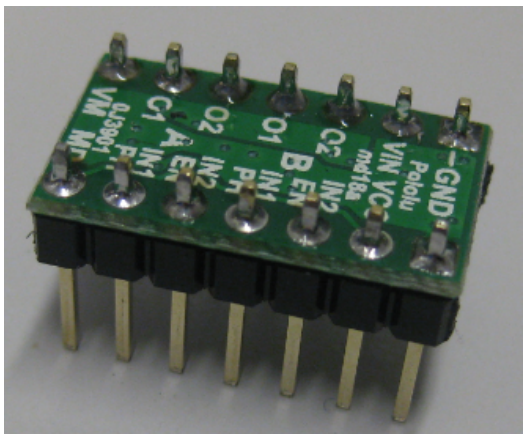

Figure 10: Motor Driver Module Top view

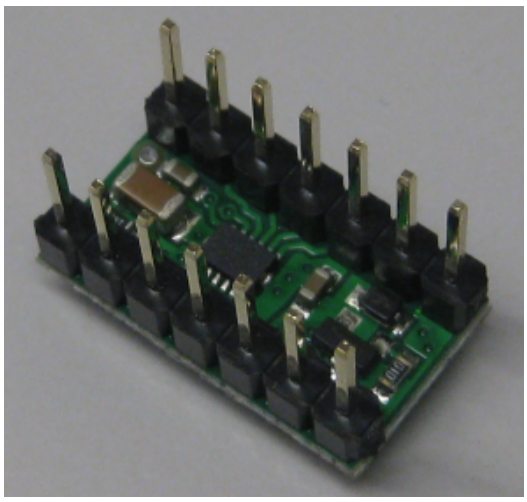

Figure 11: Motor Driver Module Bottom view

2.10 Ultrasonic Sensor

A HC-SR04 Ultrasonic sensor (Figure 12 and Figure 13) can be used with the board to detect objects and to measure the distance.

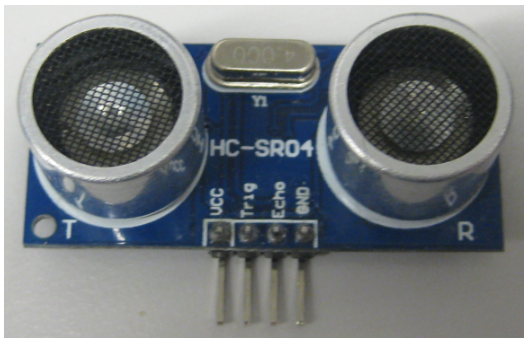

Figure 12: HC-SR04 Ultrasonic Sensor, Front View

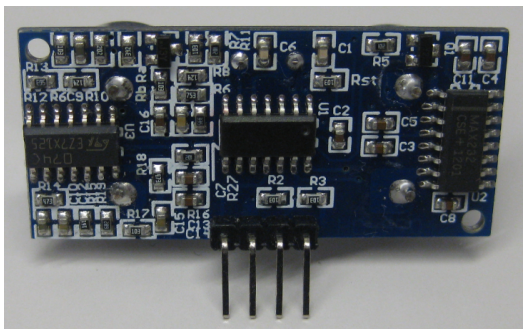

Figure 13: HC-SR04 Ultrasonic Sensor, Back View

See http://mcuoneclipse.com about how to use the HC-SR04 module. The board offers the following hardware interface (Figure 14):

- `GND`: Ground
- `Echo`: 5V signal returned by the sensor which is proportional to the distance.
- `Trig`: Trigger signal to start a measurement.
- `5V`: the module needs a 5V supply voltage.

Because the output `Echo` Signal is a 5V one, there is a voltage divider with two resistors to get it down to max 3.3V.

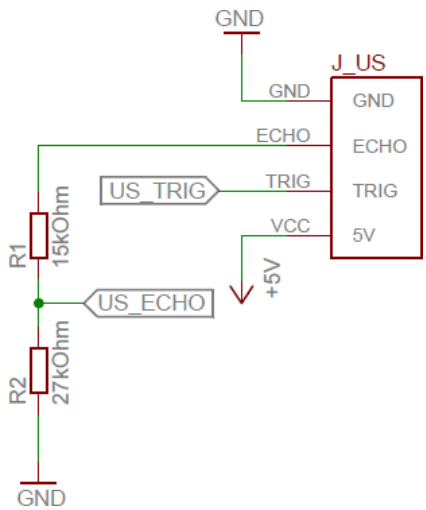

Figure 14: Ultrasonic Sensor

2.11 Reflectance Sensor Array

The reflectance sensor array is used to distinguish between black and white areas on the ground. With this, the sensor can be used for line following, maze solving or Sumo applications.

- `GND`: Ground
- `VIN`: Sensor supply voltage (7.45V). R3 is used to reduce the voltage from the 9V supply voltage. The sensor array is using approximately 40 mA.
- `VCC`: The original Pololu Zumo Reflectance Sensor Array: Pololu #1419[12] is using a 5V logic supply, but because the FRDM-KL25Z has 3.3V logic, that 3.3V is used.
- `SO_1` to `SO_6`: Digital Sensor output signal.
- `A4_LED`: This signal is used to turn on/off the IR LED's. Make sure the jumper on the sensor board is set to the A4 position.
- `2_LED`: this signal is not used.

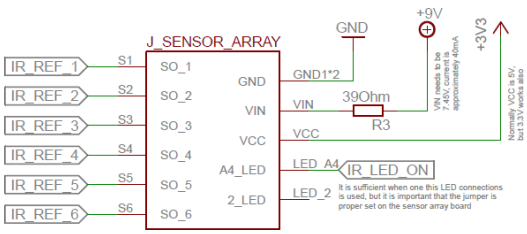

Figure 15: Reflectance Sensor Array

Make sure the sensor has the jumper set to the A4 position (Figure 16). The A4 vs. 2 position is marked on the bottom of the PCB (Figure 17).

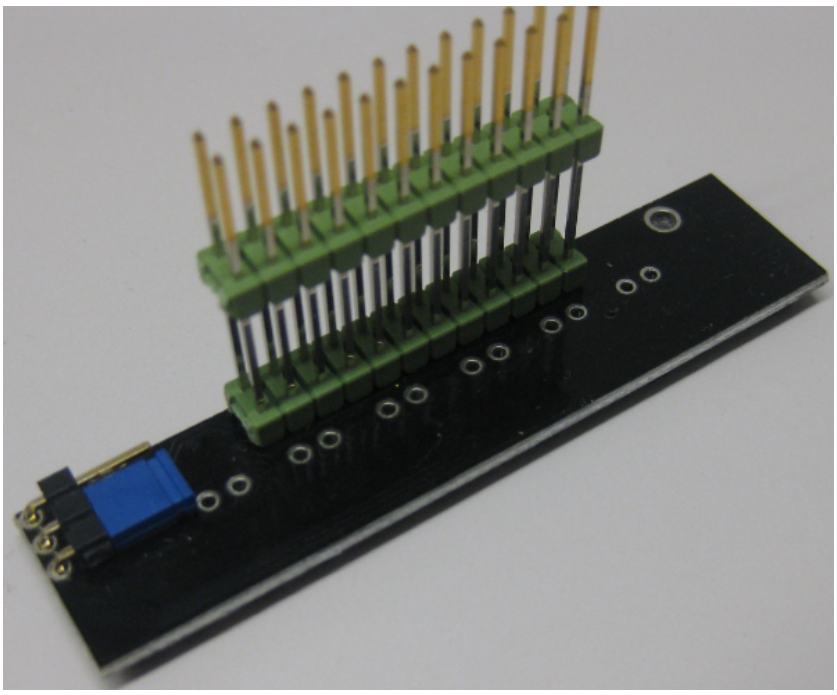

Figure 16: Reflectance Sensor Array with Jumper on A4 position

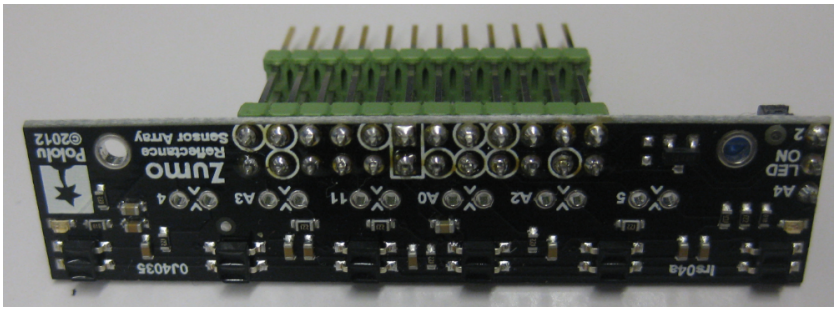

Figure 17: Reflectance Sensor Array Bottom

2.12 Bluetooth

A Serial-To-Bluetooth module with four pins can be attached to the board (Figure 18). The Bluetooth module uses an serial (RS-232, but not 3.3V logic levels!) on the TX and RX lines. As there are similar modules with different power supply needs, there is the option to use either 3.3V or 5V as supply voltage.

- GND: Ground

- VCC: either 3.3V or 5V supply voltage
- TX: Data from the transceiver (!!) to the microcontroller
- RX: Data from the microcontroller (!!) to the transceiver

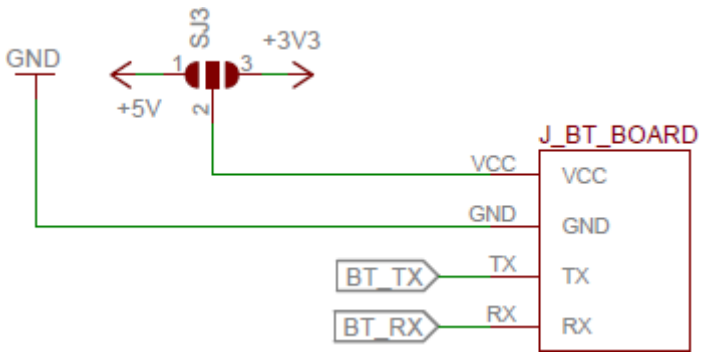

Figure 18: Bluetooth Module Connector

A standard Bluetooth module can be used (e.g. the JY-MCU Bluetooth module from http://DX.com as shown in Figure 19.

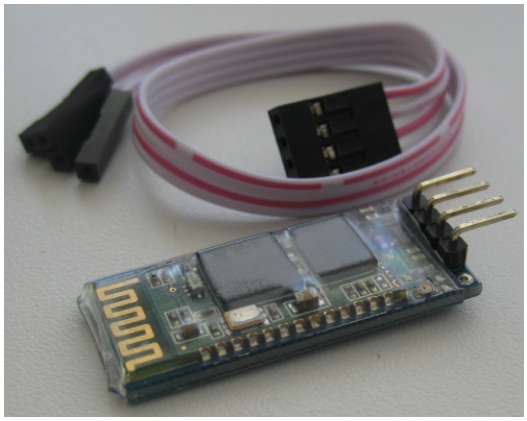

Figure 19: Original JY-MCU Bluetooth Module

However, the pin connection needs to be modified as shown in Figure 20.

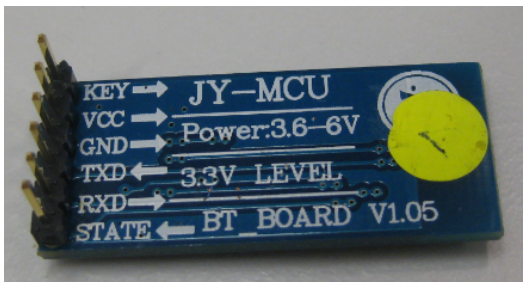

Figure 20: Modified JY-MCU Bluetooth Module

2.13 MC1320x Transceiver

Using a 10 pin header (Figure 22), the MC1320x transceiver board (Figure 21) can be connected to the board.

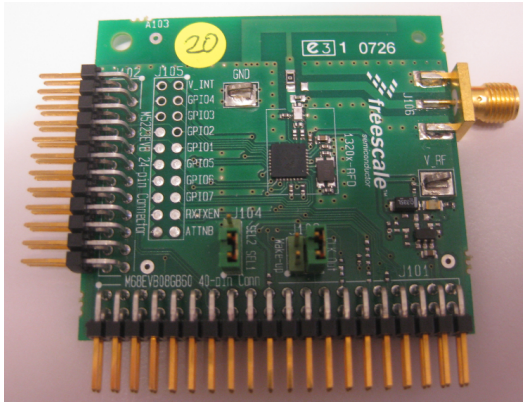

Figure 21: MC1320x Board

Either the MC13201x transceiver or the nRF24L01+ transceiver can be connected to the board. The transceiver is using a SPI communication protocol:

- 3.3V and GND: Power supply
- SPICLK: SPI clock
- MISO: SPI data from the slave to the master
- MOSI: SPI data from the master to the slave
- SS: SPI chip select
- RTTXEN: Enable RX or TX mode

- ATTN: Signal to wake up transceiver
- RESET: reset signal to the transceiver
- IRQ: signal from to transceiver to the microcontroller

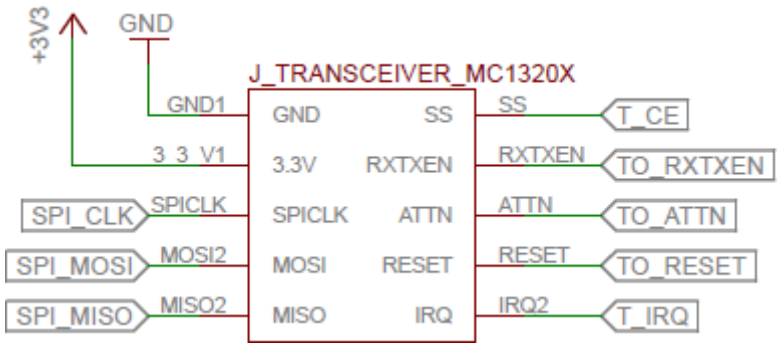

Figure 22: MC1320x Connector

2.14 nRF24L01+ Transceiver

With a 8 pin header (Figure 23) a nRF24L01+ module from Nordic Semiconductor (Figure 24 can be connected to the board. The nRF24L01+ is a 2.4 GHz transceiver optimized for low power wireless sensor node implementations. Either the MC13201x transceiver or the nRF24L01+ transceiver can be connected to the board. The nRF21L01+ is using a SPI communication interface:

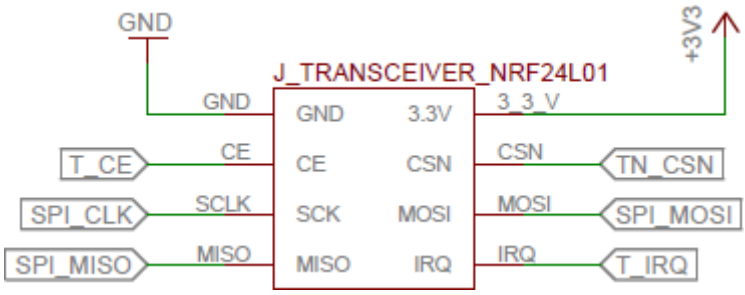

Figure 23: nRF24LP01+ Connector

- 3.3V and GND: Power supply
- CE: Activate TX or RX mode
- CSN: SPI chip select

- MISO: SPI data from the slave to the master
- MOSI: SPI data from the master to the slave
- SCK: SPI clock
- IRQ: interrupt from the transceiver

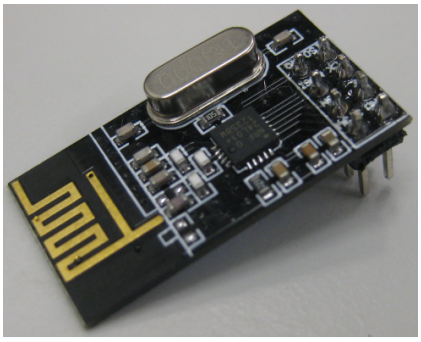

Figure 24: nRF24LP01+ Transceiver

2.15 User Sensors

The board offers a total of 4 digital user sensors (Figure 25) with following pins:

- `GND`: Ground
- `VDD`: supply voltage 3.3V
- `OUT`: Digital out signal from the sensor
- `ENABLE`: Optional sensor enable signal

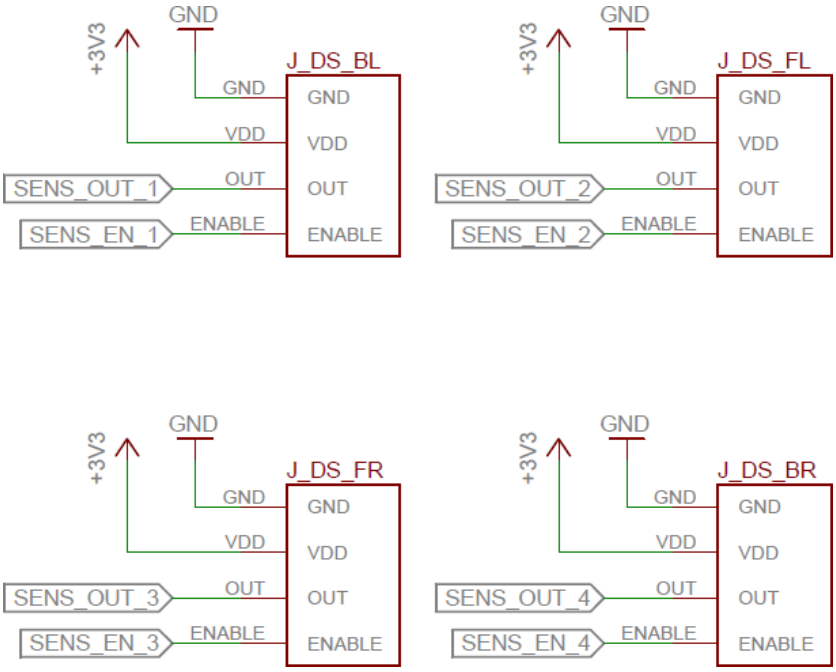

Figure 25: User Sensors

Any kind of digital sensors can be used. Examples are:

- Pololu Sharp 10 cm (Pololu #1134)[7] and 5 cm sensors (Pololu #1132[1]) (Figure 26 and 27)

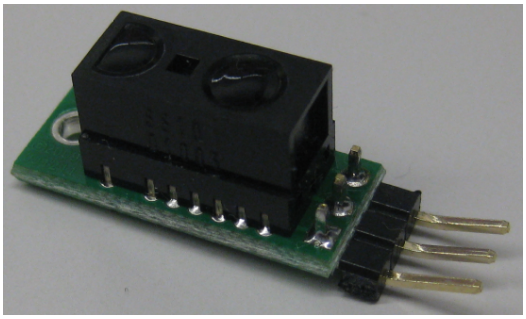

Figure 26: Sharp Optical Distance Sensor, Front Side

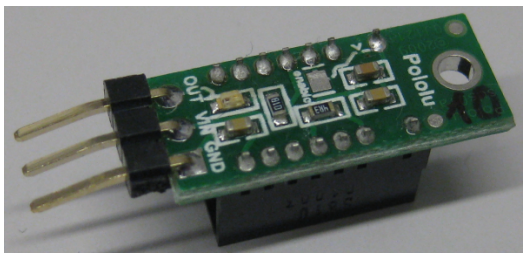

Figure 27: Sharp Optical Distance Sensor, Back Side

- Pololu 38 kHz IR Proximity Sensors High Brightness (Pololu #2460[2]) and Low Brightness Sensor (Pololu #2461[3]) (Figure 28 and 29)

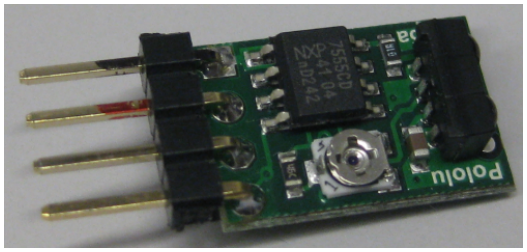

Figure 28: Pololu 38 kHz IR Proximity Sensor, Front Side

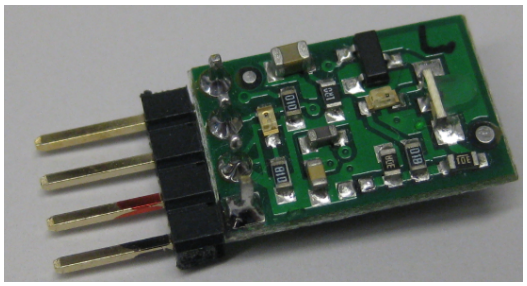

Figure 29: Pololu 38 kHz IR Proximity Sensor, Back Side

2.16 I2C Connector

Standard I^{2}C modules can be connected to the Zumo Base Board using a 4 pin connector (Figure 30). The connector provides supply voltage (3.3V and GND), plus the SCL (clock) and SDA (Data) signals. The Zumo Base Board does not have the required pull-up resistors for I^{2}C, so either the module or the processor board needs to have them.

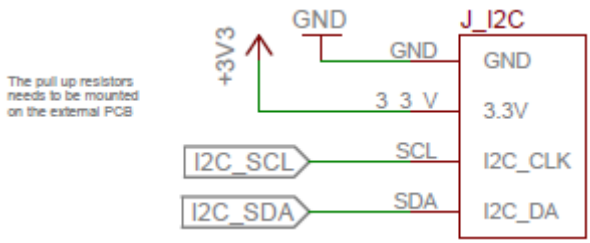

Figure 30: I^{2}C Interface

3 Layout

The PCB is double sided with white silk screen. Figure 31 shows the top side, and Figure 32 shows the bottom side. Section 6.2 shows the detailed layout and routing.

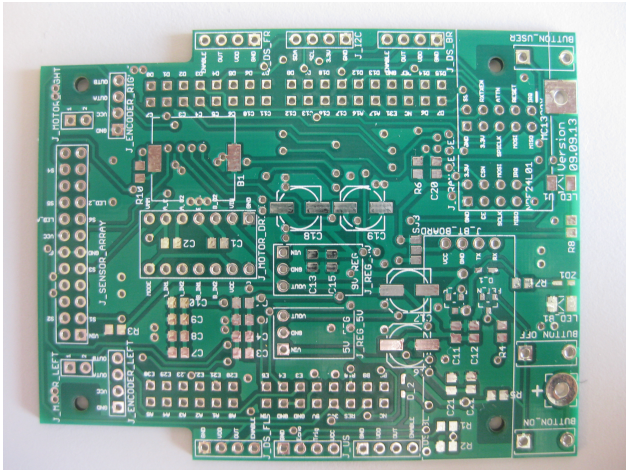

Figure 31: PCB Top Side

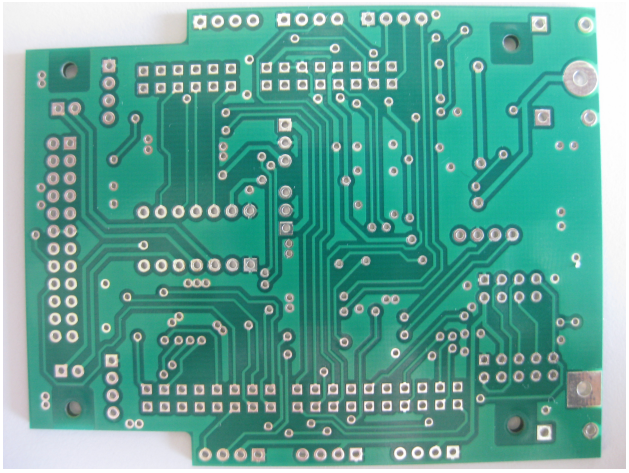

Figure 32: PCB Top Side

4 FRDM Board

This section describes how to prepare the FRDM-KL25Z board to be used with the Zumo Base Board.

4.1 Arduino Headers

The FRDM-KL25Z has no headers populated by default (Figure 33).

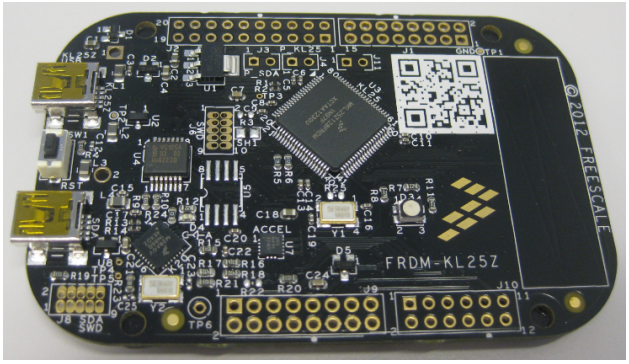

Figure 33: Unpopulated FRDM-KL25Z Board

These headers allow to plug many of available Arduino Shields on the board (see shieldlist.org).

To avoid misalignment of the headers on the board, it is a good practice to solder the header with a shield mounted. For this, have the four distance headers mounted on the Zumo Base Board (Figure 34).

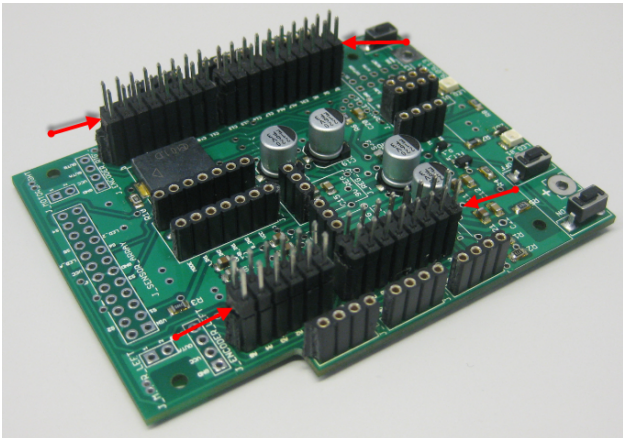

Figure 34: Distance Headers mounted on Zumo Base Board

Then put the female headers on top of it (Figure 35):

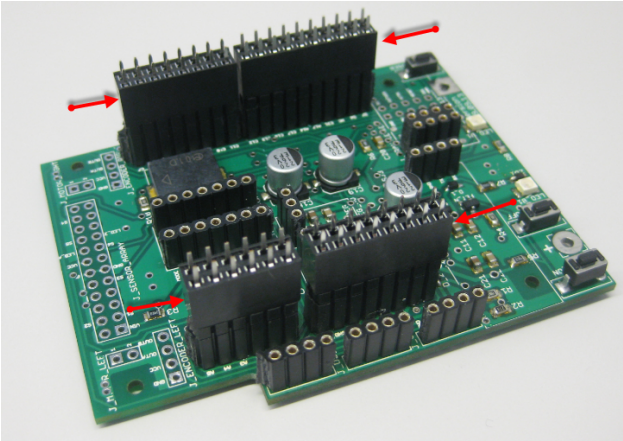

Figure 35: Female Headers mounted on Zumo Base Board

Then put the FRDM board in it and solder the pins (Figure 36):

Figure 36: FRDM Board ready for Soldering Headers

With this, the female headers are soldered on the FRDM board and properly aligned (Figure 37).

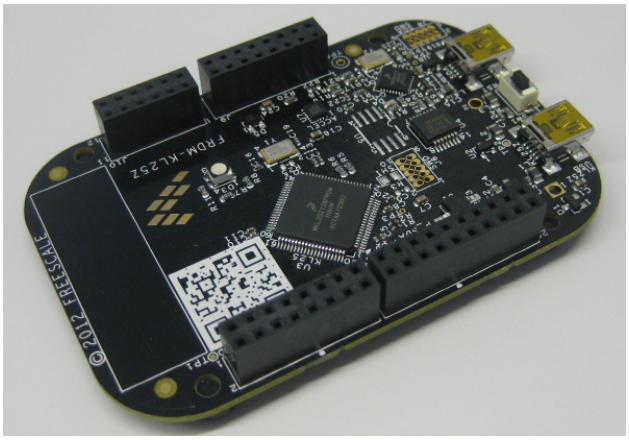

Figure 37: Female Headers mounted on FRDM Board

4.2 FRDM-KL25Z Jumpers

The FRDM-KL25Z RevD board has three jumpers (unpopolated):

- `J3`: Disconnects power to the OpenSDA (K20) microcontroller. Useful to measure power consumption of the K20 microcontroller.
- `J4`: Disconnects power to the KL25Z processor. Useful to measure power consumption of the KL25Z microcontroller.
- `J11`: Disconnects SWD signal from the onboard CPU. Usuful to debug another board with the FRDM board (see Debug External Processors with USBDM and Freedom Board)

For the INTRO course, we will only need J4, but up to you to install all three headers:

1. Cut the traces on the backside of the board with a sharp knife. Be careful to only cut the trace between the pins, and not any other trace. (Figure 38).
2. Solder the headers on the board and put jumpers on it (Figure 39).

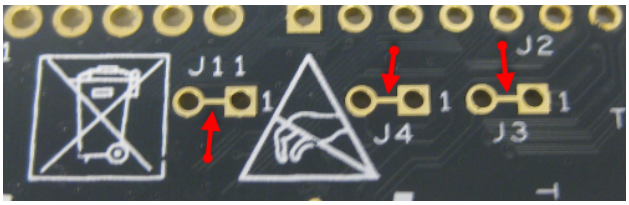

Figure 38: Cut Traces between Jumpers on FRDM Board

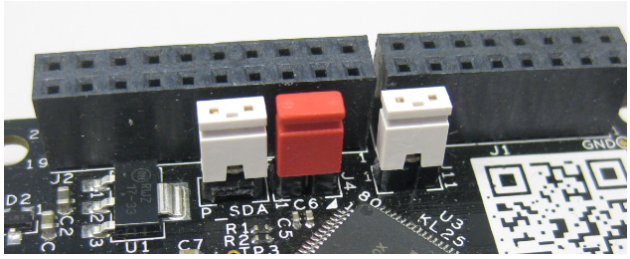

Figure 39: Headers with Jumpers on FRDM Board

5 Zumo Base Board

This section describes how to equip the Zumo Base Board. The Zumo Base Board is designed to fit on top of the Pololu Zumo chassis[11].

5.1 Material

The following material is needed to equip the Zumo Base Board (see section 6.4 for a BOM (Bill of Material):

- An empty Zumo Base Board PCB
- Board to board connectors:
  - Standard double-row socket (Distrelec order number 12 15 88), 2x36
  - Single-row socket (Distrelec order number 12 15 62), 1x42
  - Double-row header (Distrelec order number 12 21 04), 2x5
  - Special double-row header (Distrelec order number 12 22 07), 2x32
  - Another special double-row header (Distrelec order number 12 24 56), 2x12
- One Buzzer (Farnell order number 1192551)
- Four 220uF electrolyte capacitors (Farnell order number 1735331)
- One N-Channel MOSFET (Farnell order number 1299316)
- One P-Channel MOSFET (Farnell order number 1431303)
- Two Schottky Diodes (Farnell order number 9525149)
- One Z-Diode 3.6V (Farnell order number 8735654)
- One red LED (Farnell order number 1328349)
- One orange LED (Farnell order number 1328332)
- Standard SMD 0805 resistors and ceramic capacitors (can be found in the electronic workshop, room number C301)
- Three push buttons (Pololu order number 1400)

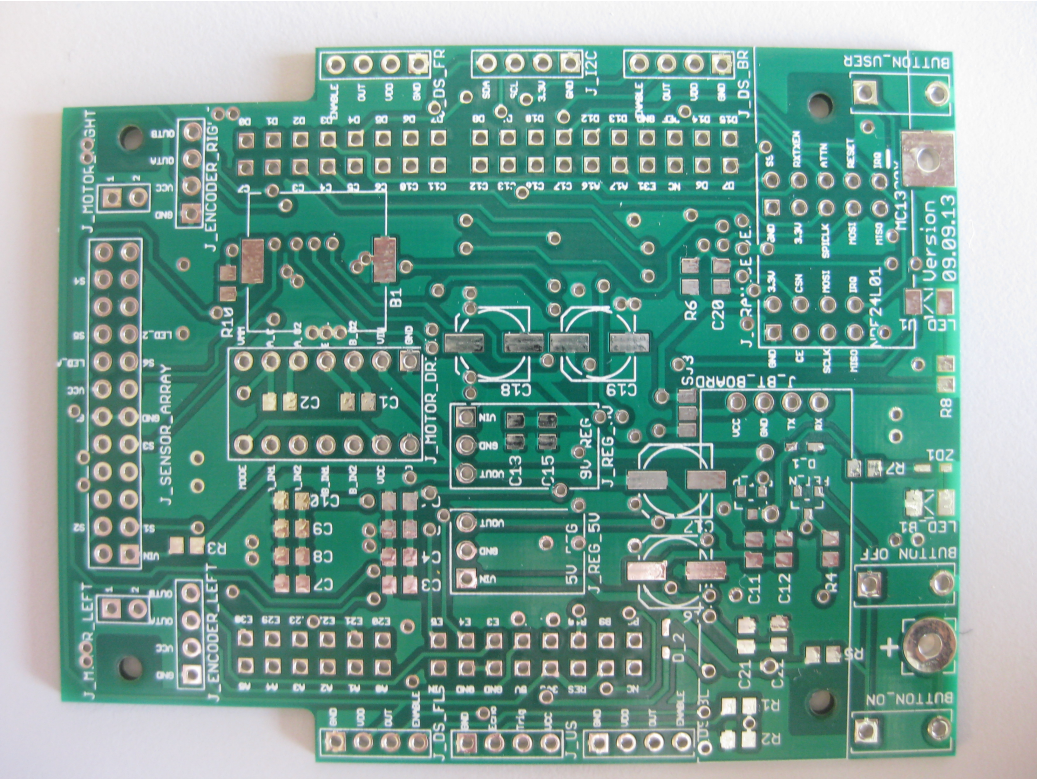

Figure 40: Top side of an empty Zumo Base Board PCB

5.2 Mounting Surface Mounted Devices (SMD)

The easiest way to equip the Zumo Base Board is to start with the SMD components. At the end of this part, the Zumo Base Board should look similar to Figure 41.

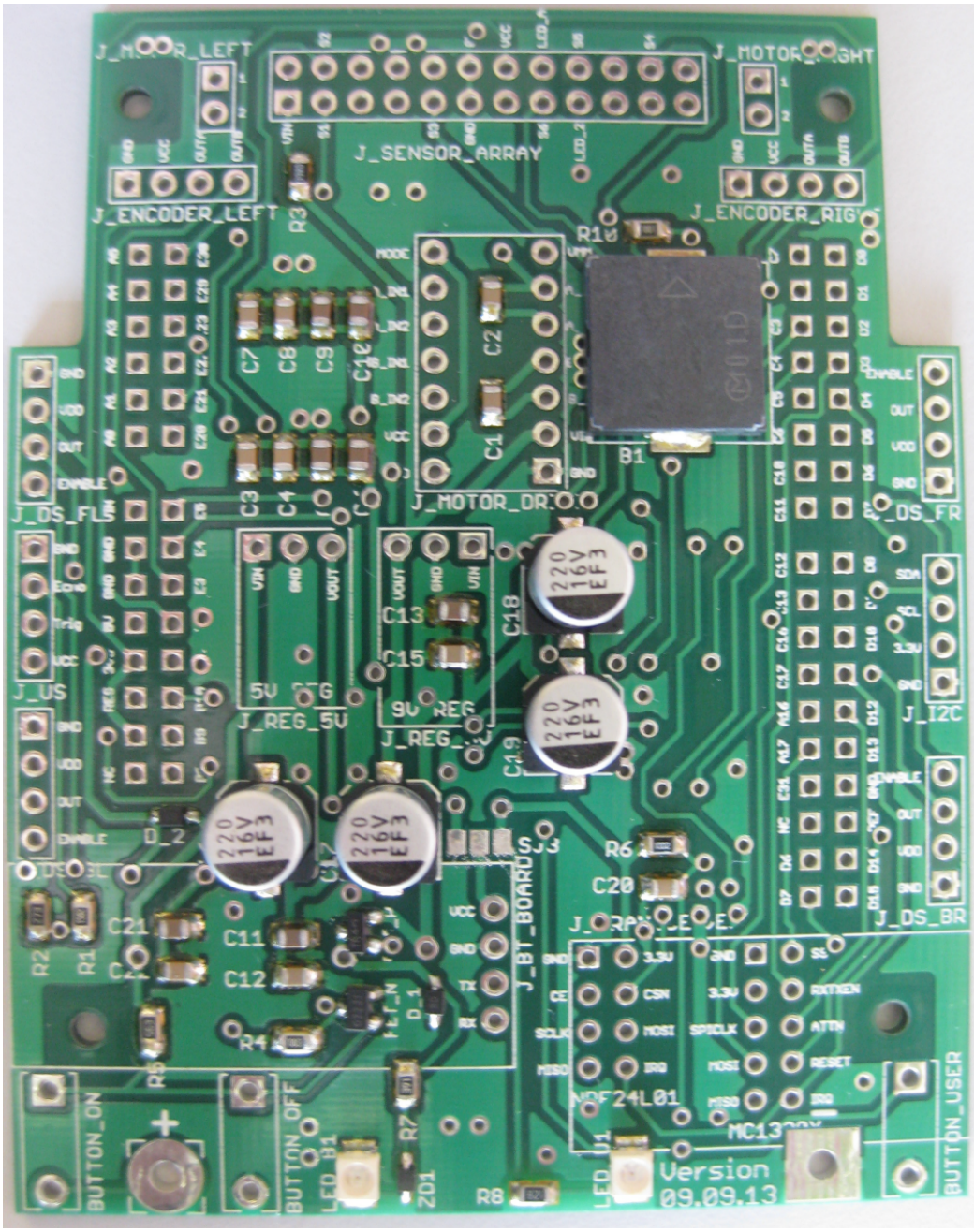

Figure 41: Top side of a Zumo Base Board PCB with SMD components equipped

When mounting the 0805 resistors and ceramic capacitors, take care to mount the components with the proper value. Use the Zumo Base Board Schematic (Section 6.1) for that purpose.

Hint: The value of R7 does not need to be exactly 300 Ohm (the 0805 300 Ohm resistor might not available in the electronic workshop). It is also possible to take a 270 Ohm resistance instead.

The ceramic capacitors, resistors and the buzzer do not have any polarity, so it does not matter which way they are placed on the PCB. The diodes and the electrolyte capacitors are polarized, so take care of that before mounting them.

5.3 Schottky Diode

On the Schottky Diode there is the text 'BD' on the package. The data sheet (ZHCS400.pdf) indicates that the cathode is marked with a 'D'. Unfortunately, a label that should mark the cathode on the PCB was not printed. Take a look at Figure 42 and 43 to mount them properly.

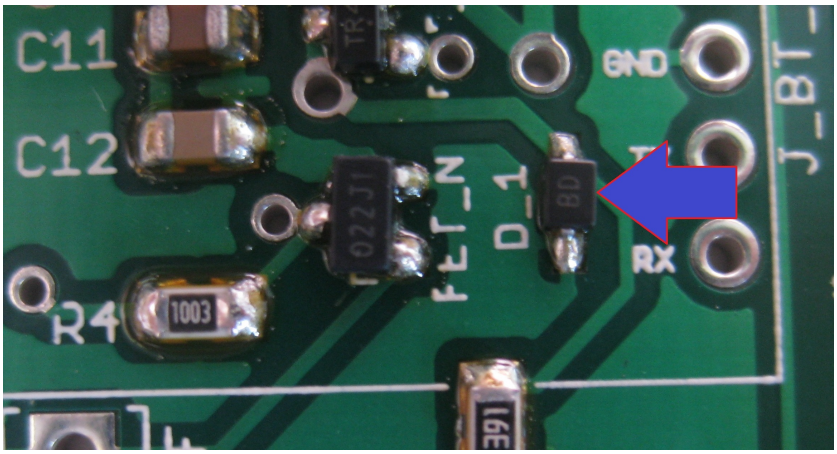

Figure 42: D1 mounted on the Zumo Base Board

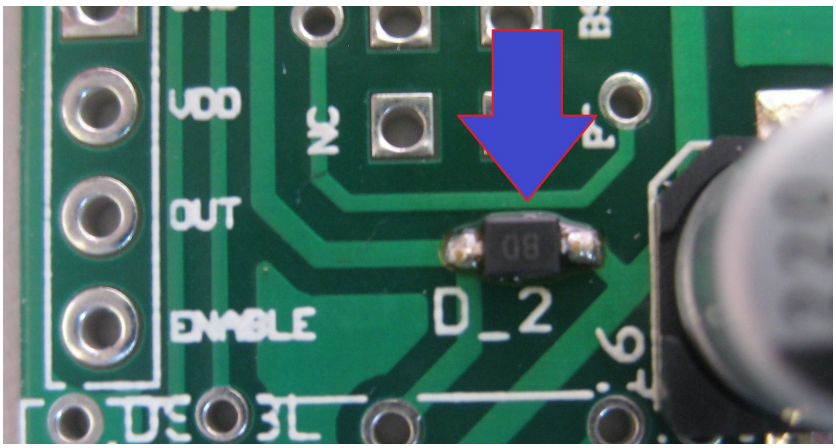

Figure 43: D2 mounted on the Zumo Base Board

5.4 Z-Diode

The Z-Diode is marked with some small lines at the cathode (take a look at the data sheet: BZX384SERIES.pdf). Figure 44 shows how the Z-Diode has to be mounted.

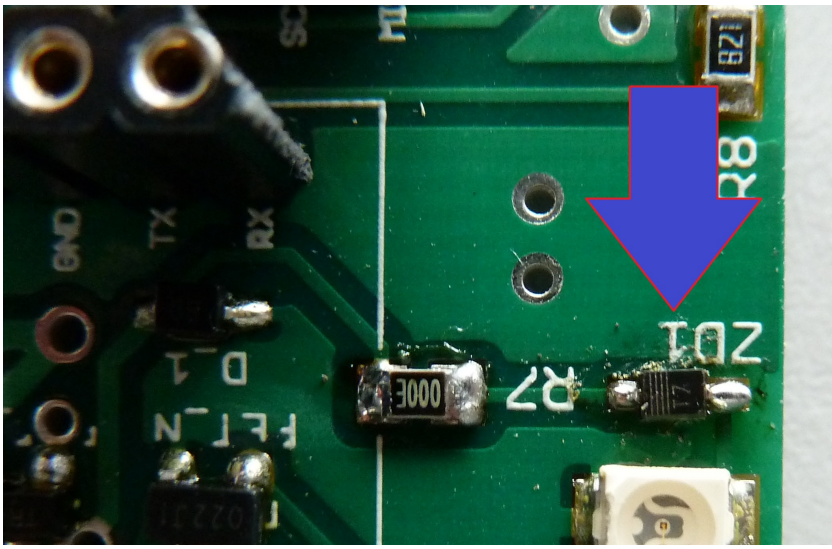

Figure 44: ZD1 mounted on the Zumo Base Board

5.5 LED

Figure 45 shows the placement of the LED components:

- LED_U1: orange

- LED_B1: red

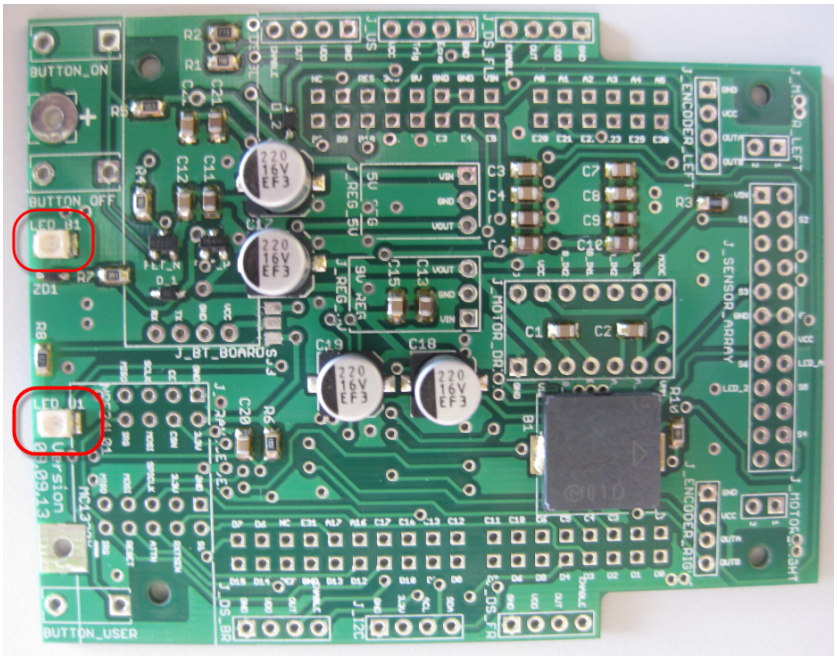

Figure 45: LED placement on board

A nick on one corner marks the cathode of the LED (take a look at the data sheet: VLMx30.pdf). It is printed on the PCB where the cathode of the LED's should be. Take a look at the Figures 46 and 47 to mount them properly.

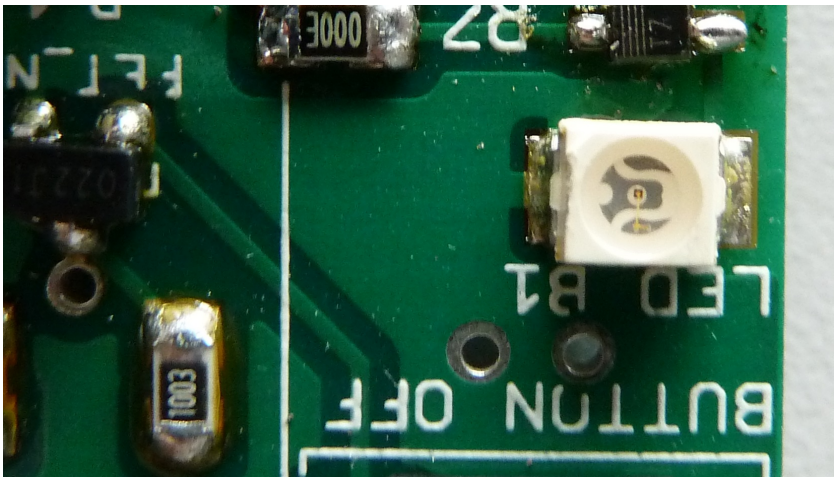

Figure 46: The red battery power LED mounted on the Zumo Base Board

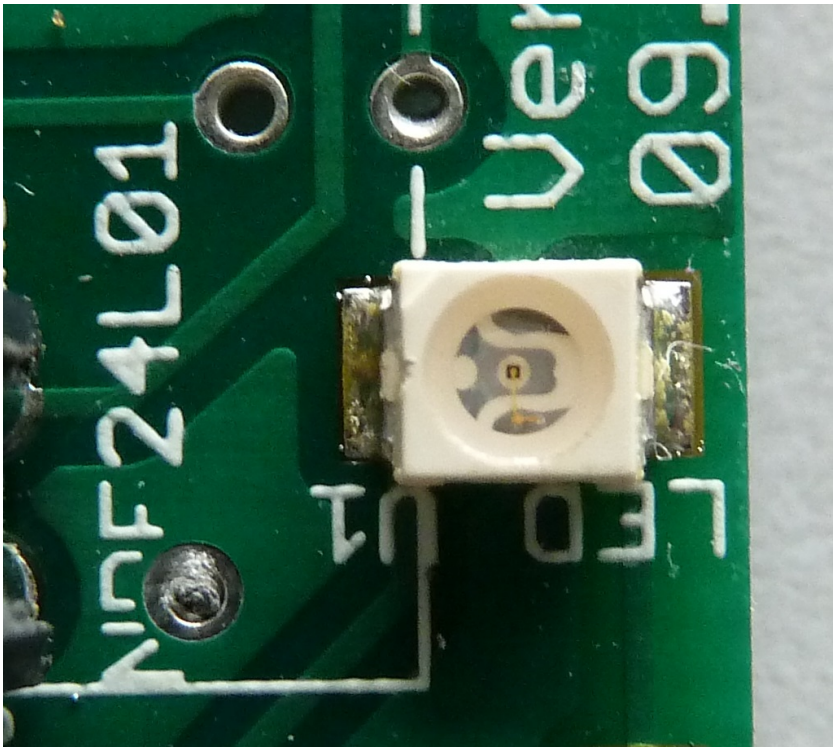

Figure 47: The orange user LED mounted on the Zumo Base Board

5.6 Electrolyte Capacitors

For the electrolyte capacitors, the positive pole is marked with the cut corners at the bottom, and on the top of the case black color marks the negative pole (take a look at the data sheet: B41142.pdf). The cut corners are also printed on the PCB. Figure 48 shows how the electrolyte capacitors have to be mounted.

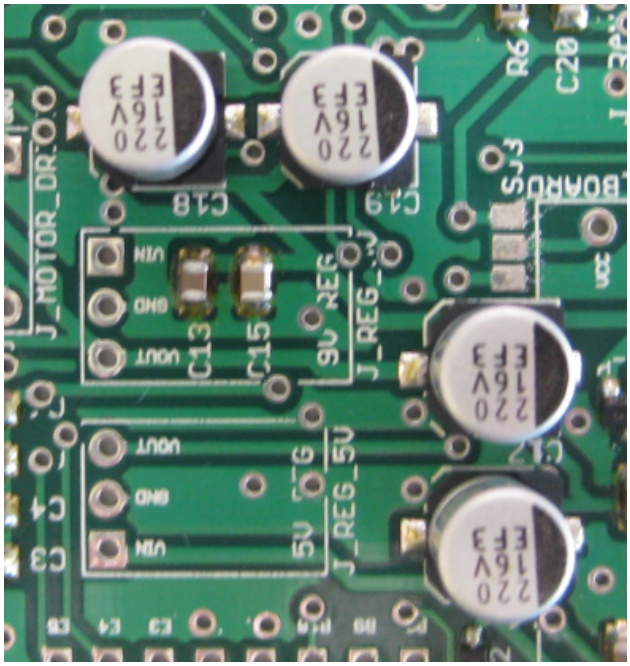

Figure 48: Electrolyte capacitors mounted

5.7 Mounting Through Hole Technology (THT) Devices

After finishing the SMD devices, mount the THT components.

6 Appendix

6.1 INTRO Robo Base Board Schematics

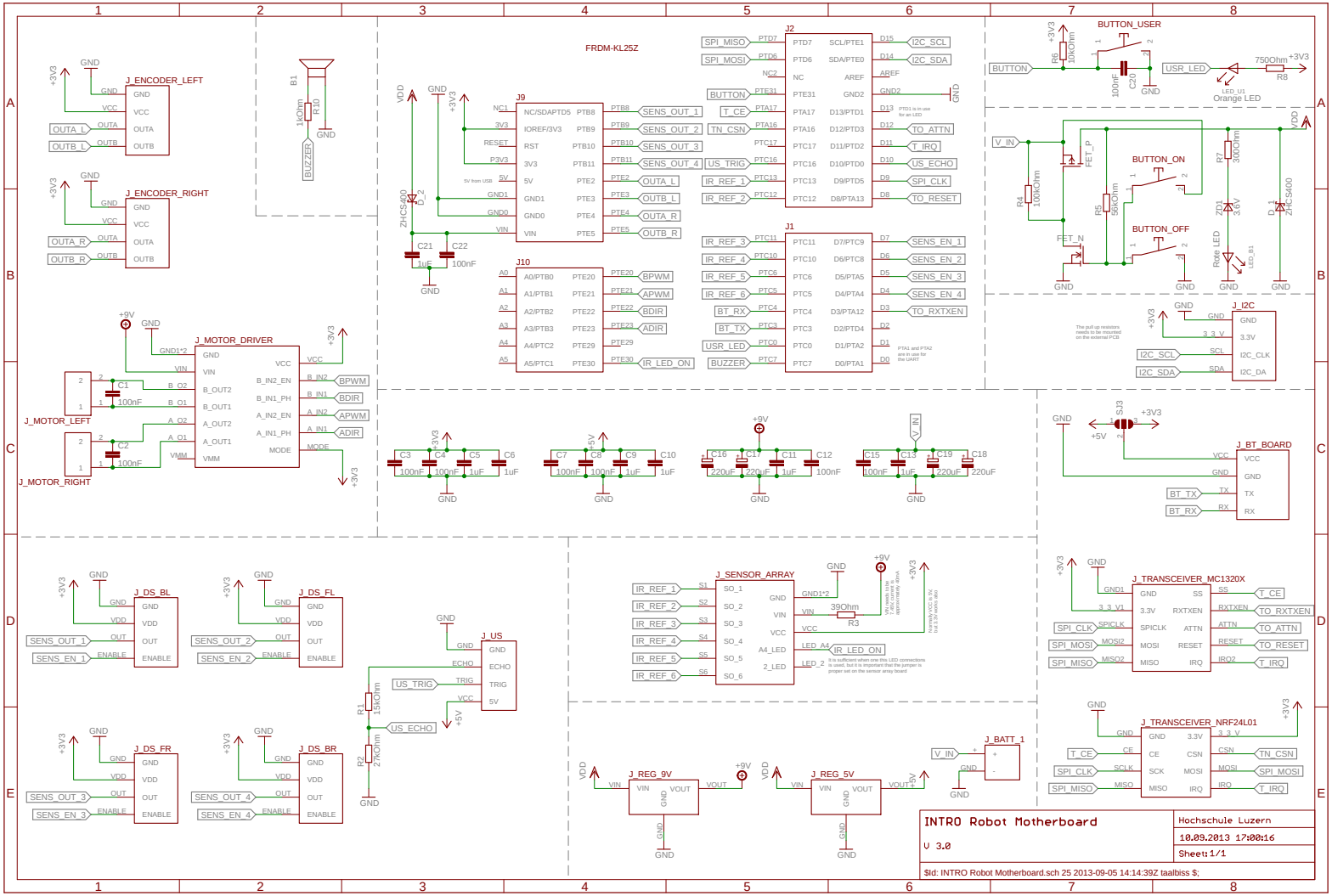
FRDM-KL25Z
J_ENCODER_LEFT
J_ENCODER_RIGHT
J_MOTOR_DRIVER
J_MOTOR_LEFT
J_MOTOR_RIGHT
J_DS_BL
J_DS_FL
J_DS_FR
J_DS_BR
J_US
J_SENSOR_ARRAY
J_REG_9V
J_REG_5V
J_BATT_1
J_BT_BOARD
J_TRANSCEIVER_MC1320X
J_TRANSCEIVER_NRF24L01
J_I2C
BUTTON_USER
BUTTON_ON
BUTTON_OFF
INTRO Robot Motherboard
V 3.0
Hochschule Luzern
10.09.2013 17:00:16
Sheet: 1/1
$Id: INTRO Robot Motherboard.sch 25 2013-09-05 14:14:39Z taalbiss $;

6.2 INTRO Zumo Base Board Layout

1. Top side with silk screen and solder mask
2. Top and bottom side with silk screen
3. Top side only
4. Bottom side only

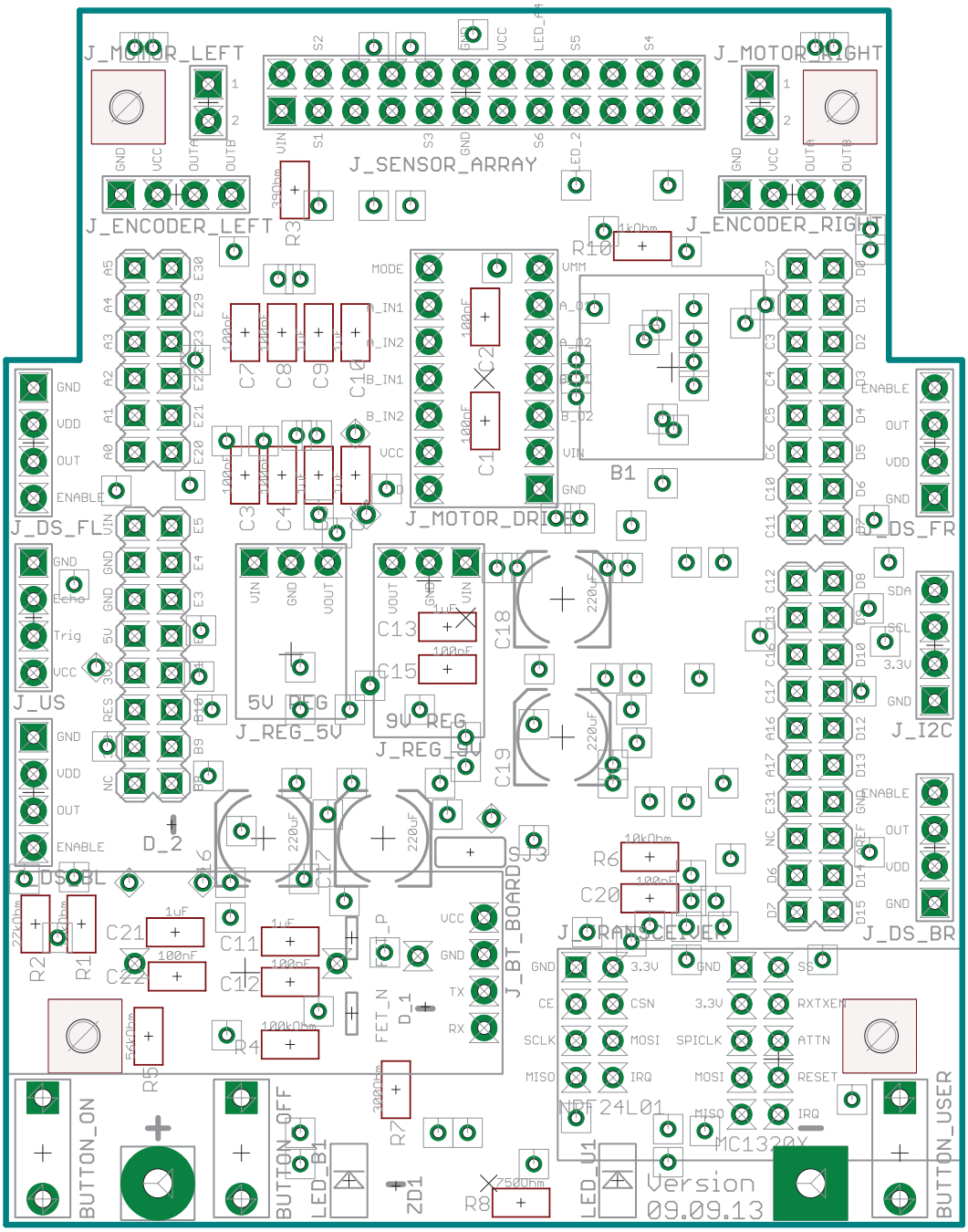
J_MOTOR_LEFT
J_MOTOR_RIGHT
J_SENSOR_ARRAY
J_ENCODER_LEFT
J_ENCODER_RIGHT
J_DS_FL
J_DS_FR
J_DS_BL
J_DS_BR
J_US
J_I2C
J_MOTOR_DRIVER
J_REG_5V
J_REG_9V
J_BT_BOARD
J_TRANSCEIVER
5V REG
9V REG
NRF24L01
MC1320X
BUTTON_ON
BUTTON_OFF
BUTTON_USER
LED_B1
LED_U1
ZD1
Version
09.09.13

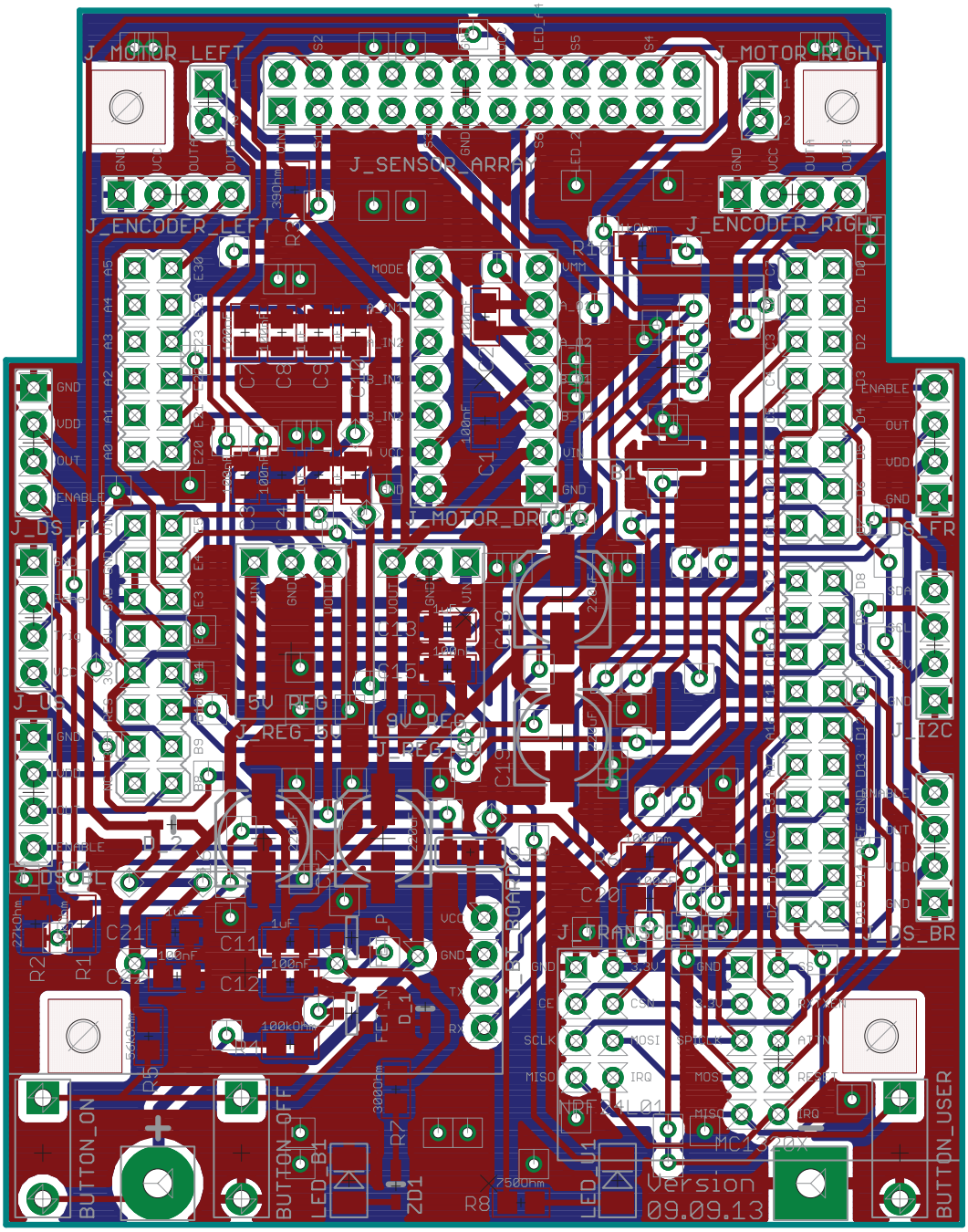
J_MOTOR_LEFT
J_MOTOR_RIGHT
J_SENSOR_ARRAY
J_ENCODER_LEFT
J_ENCODER_RIGHT
J_MOTOR_DRIVER
J_DS_FL
J_DS_FR
J_US
J_I2C
J_DS_BL
J_DS_BR
J_REG_5V
J_REG_9V
J_TRANSCEIVER
BUTTON_ON
BUTTON_OFF
BUTTON_USER
LED_B1
LED_U1
ZD1
Version
09.09.13

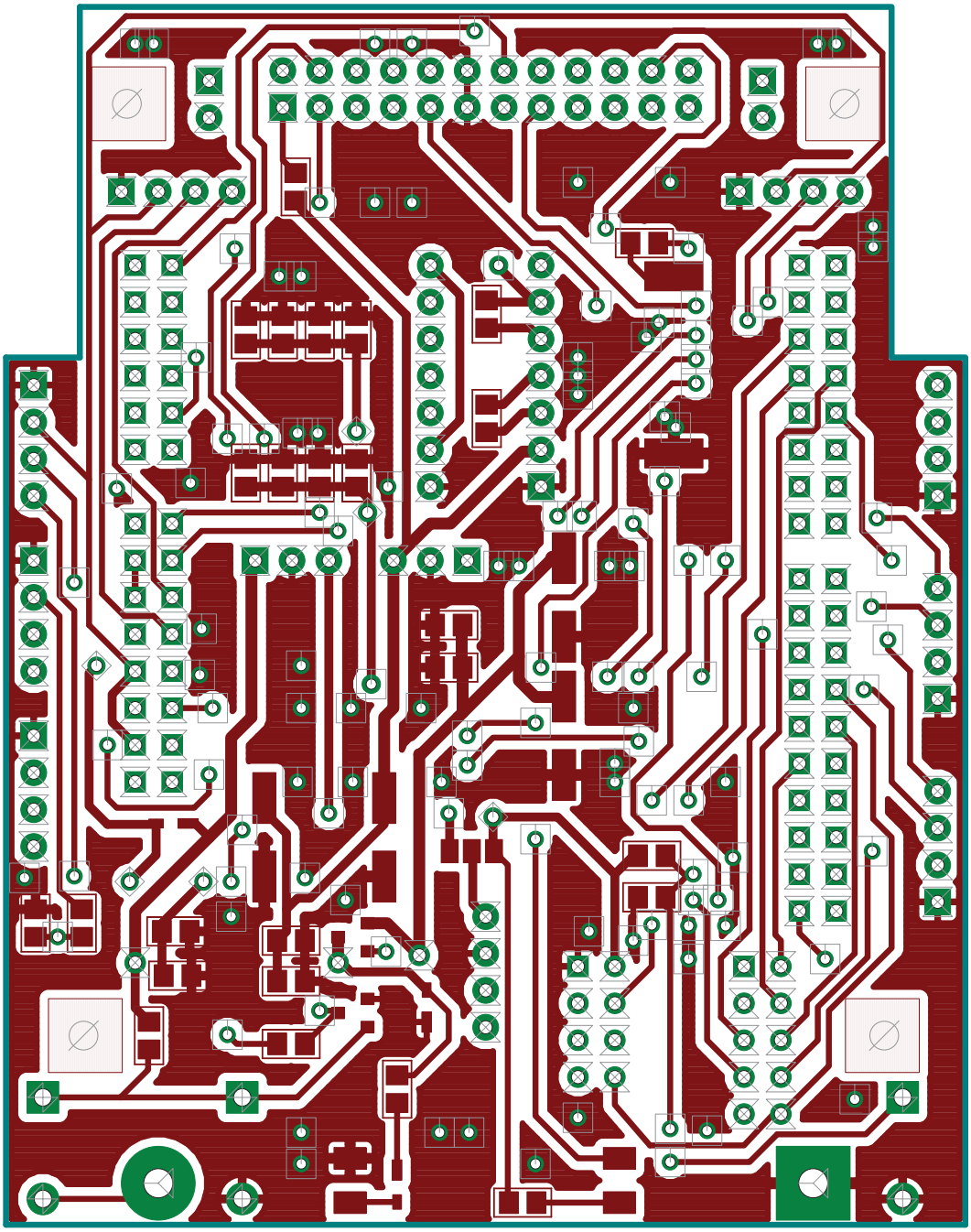

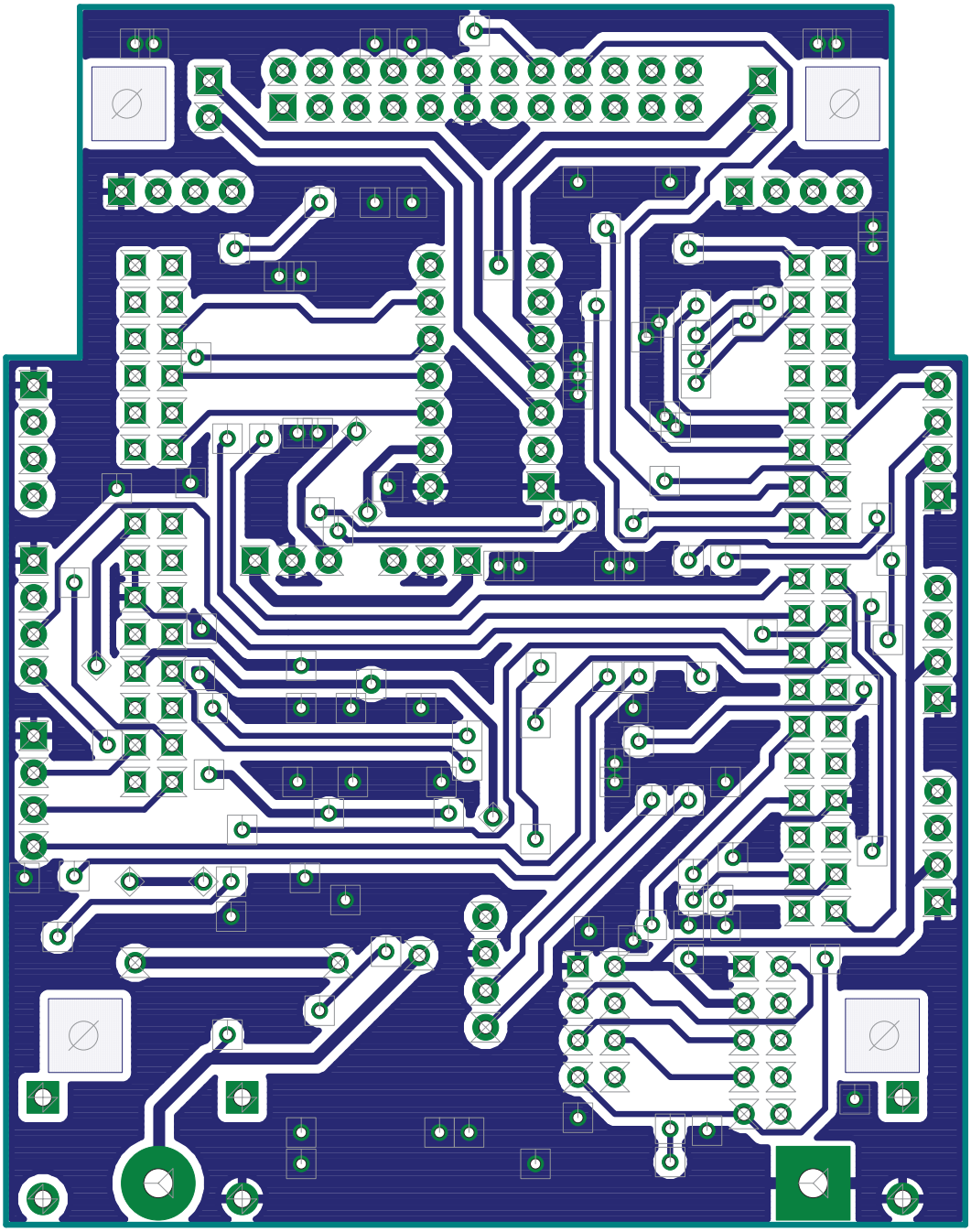

6.3 Pin Mapping

The following pages show the pin assignment as reported by Processor Expert:

```
===================================================================
THIS FILE WAS GENERATED BY "Processor Expert version 10.3 for Freescale Microcontrollers".
Project "ProcessorExpert", 2013-09-25, 17:26, # CodeGen: 190
DO NOT MODIFY IT.
===================================================================


===================================================================
 SIGNAL LIST
-------------------------------------------------------------------
SIGNAL-NAME [DIR]          => PIN-NAME [PIN-NUMBER]
-------------------------------------------------------------------
BT_RX_J1_5 [Input]         => PTC3/LLWU_P7/UART1_RX/TPM0_CH2/CLKOUTa [58]
BT_RX_J1_5 [Input]         => PTC3/LLWU_P7/UART1_RX/TPM0_CH2/CLKOUTa [58]
BT_TX_J1_7 [Output]        => PTC4/LLWU_P8/SPI0_PCS0/UART1_TX/TPM0_CH3 [61]
BT_TX_J1_7 [Output]        => PTC4/LLWU_P8/SPI0_PCS0/UART1_TX/TPM0_CH3 [61]
BUTTON [Input]             => PTE31/TPM0_CH4 [23]
BUZZER [Output]            => CMP0_IN1/PTC7/SPI0_MISO/SPI0_MOSI [64]
D10cm_Left_Front_SENS_OUT_2 [Input] => PTB9 [48]
D10cm_Right_Front_SENS_OUT_3 [Input] => PTB10/SPI1_PCS0 [49]
D5cm_Left_Back_SENS_OUT_1 [Input] => PTB8/EXTRG_IN [47]
D5cm_Right_SENS_OUT_4 [Input] => PTB11/SPI1_SCK [50]
DIR_LEFT_J10_05 [Output] => ADC0_DP3/ADC0_SE3/PTE22/TPM2_CH0/UART2_TX [15]
DIR_RIGHT_J10_07 [Output] => ADC0_DM3/ADC0_SE7a/PTE23/TPM2_CH1/UART2_RX [16]
IR_1 [I/O]                 => PTC13/TPM_CLKIN1 [70]
IR_2 [I/O]                 => PTC12/TPM_CLKIN0 [69]
IR_3 [I/O]                 => PTC11/I2C1_SDA [68]
IR_4 [I/O]                 => PTC10/I2C1_SCL [67]
IR_5 [I/O]                 => CMP0_IN0/PTC6/LLWU_P10/SPI0_MOSI/EXTRG_IN/SPI0_MISO [63]
IR_6 [I/O]                 => PTC5/LLWU_P9/SPI0_SCK/LPTMR0_ALT2/CMP0_OUT [62]
```

```
LED_BLUE_YELLOW_D13 [Output] => ADC0_SE5b/PTD1/SPI0_SCK/TPM0_CH1 [74]
LED_GREEN [Output]           => TSI0_CH12/PTB19/TPM2_CH1 [54]
LED_IR [Output]              => DAC0_OUT/ADC0_SE23/CMP0_IN4/PTE30/TPM0_CH3/TPM_CLKIN1 [22]
LED_RED [Output]             => TSI0_CH11/PTB18/TPM2_CH0 [53]
LED_USER [Output]            => ADC0_SE14/TSI0_CH13/PTC0/EXTRG_IN/CMP0_OUT [55]
Left_A_J9_09 [Input]         => PTE2/SPI1_SCK [3]
Left_B_J9_11 [Input]         => PTE3/SPI1_MISO/SPI1_MOSI [4]
MISO_J2_19 [Input]           => PTD7/SPI1_MISO/UART0_TX/SPI1_MOSI [80]
MOSI_J2_17 [Output]          => ADC0_SE7b/PTD6/LLWU_P15/SPI1_MOSI/UART0_RX/SPI1_MISO [79]
OpenSDA_RxD [Input]          => TSI0_CH2/PTA1/UART0_RX/TPM2_CH0 [27]
OpenSDA_RxD [Input]          => TSI0_CH2/PTA1/UART0_RX/TPM2_CH0 [27]
OpenSDA_TxD [Output]         => TSI0_CH3/PTA2/UART0_TX/TPM2_CH1 [28]
OpenSDA_TxD [Output]         => TSI0_CH3/PTA2/UART0_TX/TPM2_CH1 [28]
PWM_LEFT_J10_01 [Output] => ADC0_DP0/ADC0_SE0/PTE20/TPM1_CH0/UART0_TX [13]
PWM_LEFT_J10_01 [Output] => ADC0_DP0/ADC0_SE0/PTE20/TPM1_CH0/UART0_TX [13]
PWM_RIGHT_J10_03 [Output] => ADC0_DM0/ADC0_SE4a/PTE21/TPM1_CH1/UART0_RX [14]
PWM_RIGHT_J10_03 [Output] => ADC0_DM0/ADC0_SE4a/PTE21/TPM1_CH1/UART0_RX [14]
RADIO_ATTN_J2_D12 [Output] => PTD3/SPI0_MISO/UART2_TX/TPM0_CH3/SPI0_MOSI [76]
RADIO_CE_J1_06 [Output]  => PTA17/SPI0_MISO/SPI0_MOSI [37]
RADIO_IRQ_J2_13 [Input]  => PTD2/SPI0_MOSI/UART2_RX/TPM0_CH2/SPI0_MISO [75]
RADIO_RESET_J2_02 [Output] => PTA13/TPM1_CH1 [33]
RADIO_RTXEN_J2_11 [Output] => PTA12/TPM1_CH0 [32]
Right_A_J9_15 [Input]    => PTE5 [6]
Right_B_J9_13 [Input]    => PTE4/SPI1_PCS0 [5]
SCL                      => PTE24/TPM0_CH0/I2C0_SCL [24]
SDA                      => PTE25/TPM0_CH1/I2C0_SDA [25]
SensEn1 [Output]         => CMP0_IN3/PTC9/I2C0_SDA/TPM0_CH5 [66]
SensEn2 [Output]         => CMP0_IN2/PTC8/I2C0_SCL/TPM0_CH4 [65]
SensEn3 [Output]         => PTA5/USB_CLKIN/TPM0_CH2 [31]
SensEn4 [Output]         => TSI0_CH5/PTA4/I2C1_SDA/TPM0_CH1/NMI_b [30]
SPI_CLK_J2_04 [Output]   => ADC0_SE6b/PTD5/SPI1_SCK/UART2_TX/TPM0_CH5 [78]
US_Echo [Input]          => PTD0/SPI0_PCS0/TPM0_CH0 [73]
```

```
US_Trig [Output]          => PTC16 [71]
==================================================================
 PIN LIST
------------------------------------------------------------------
PIN-NAME [PIN-NUM]        => SIGNAL-NAME [DIRECTION]
------------------------------------------------------------------
ADC0_DM0/ADC0_SE4a/PTE21/TPM1_CH1/UART0_RX [14] => PWM_RIGHT_J10_03 [Output]
ADC0_DM0/ADC0_SE4a/PTE21/TPM1_CH1/UART0_RX [14] => PWM_RIGHT_J10_03 [Output]
ADC0_DM3/ADC0_SE7a/PTE23/TPM2_CH1/UART2_RX [16] => DIR_RIGHT_J10_07 [Output]
ADC0_DP0/ADC0_SE0/PTE20/TPM1_CH0/UART0_TX [13] => PWM_LEFT_J10_01 [Output]
ADC0_DP0/ADC0_SE0/PTE20/TPM1_CH0/UART0_TX [13] => PWM_LEFT_J10_01 [Output]
ADC0_DP3/ADC0_SE3/PTE22/TPM2_CH0/UART2_TX [15] => DIR_LEFT_J10_05 [Output]
ADC0_SE14/TSI0_CH13/PTC0/EXTRG_IN/CMP0_OUT [55] => LED_USER [Output]
ADC0_SE5b/PTD1/SPI0_SCK/TPM0_CH1 [74] => LED_BLUE_YELLOW_D13 [Output]
ADC0_SE6b/PTD5/SPI1_SCK/UART2_TX/TPM0_CH5 [78] => SPI_CLK_J2_04 [Output]
ADC0_SE7b/PTD6/LLWU_P15/SPI1_MOSI/UART0_RX/SPI1_MISO [79] => MOSI_J2_17 [Output]
CMP0_IN0/PTC6/LLWU_P10/SPI0_MOSI/EXTRG_IN/SPI0_MISO [63] => IR_5 [I/O]
CMP0_IN1/PTC7/SPI0_MISO/SPI0_MOSI [64] => BUZZER [Output]
CMP0_IN2/PTC8/I2C0_SCL/TPM0_CH4 [65] => SensEn2 [Output]
CMP0_IN3/PTC9/I2C0_SDA/TPM0_CH5 [66] => SensEn1 [Output]
DAC0_OUT/ADC0_SE23/CMP0_IN4/PTE30/TPM0_CH3/TPM_CLKIN1 [22] => LED_IR [Output]
PTA12/TPM1_CH0 [32]       => RADIO_RTXEN_J2_11 [Output]
PTA13/TPM1_CH1 [33]       => RADIO_RESET_J2_02 [Output]
PTA17/SPI0_MISO/SPI0_MOSI [37] => RADIO_CE_J1_06 [Output]
PTA5/USB_CLKIN/TPM0_CH2 [31] => SensEn3 [Output]
PTB10/SPI1_PCS0 [49]      => D10cm_Right_Front_SENS_OUT_3 [Input]
PTB11/SPI1_SCK [50]       => D5cm_Right_SENS_OUT_4 [Input]
PTB8/EXTRG_IN [47]        => D5cm_Left_Back_SENS_OUT_1 [Input]
PTB9 [48]                 => D10cm_Left_Front_SENS_OUT_2 [Input]
```

```
PTC10/I2C1_SCL [67]        => IR_4 [I/O]
PTC11/I2C1_SDA [68]        => IR_3 [I/O]
PTC12/TPM_CLKIN0 [69]      => IR_2 [I/O]
PTC13/TPM_CLKIN1 [70]      => IR_1 [I/O]
PTC16 [71]                 => US_Trig [Output]
PTC3/LLWU_P7/UART1_RX/TPM0_CH2/CLKOUTa [58] => BT_RX_J1_5 [Input]
PTC3/LLWU_P7/UART1_RX/TPM0_CH2/CLKOUTa [58] => BT_RX_J1_5 [Input]
PTC4/LLWU_P8/SPI0_PCS0/UART1_TX/TPM0_CH3 [61] => BT_TX_J1_7 [Output]
PTC4/LLWU_P8/SPI0_PCS0/UART1_TX/TPM0_CH3 [61] => BT_TX_J1_7 [Output]
PTC5/LLWU_P9/SPI0_SCK/LPTMR0_ALT2/CMP0_OUT [62] => IR_6 [I/O]
PTD0/SPI0_PCS0/TPM0_CH0 [73] => US_Echo [Input]
PTD2/SPI0_MOSI/UART2_RX/TPM0_CH2/SPI0_MISO [75] => RADIO_IRQ_J2_13 [Input]
PTD3/SPI0_MISO/UART2_TX/TPM0_CH3/SPI0_MOSI [76] => RADIO_ATTN_J2_D12 [Output]
PTD7/SPI1_MISO/UART0_TX/SPI1_MOSI [80] => MISO_J2_19 [Input]
PTE2/SPI1_SCK [3]          => Left_A_J9_09 [Input]
PTE24/TPM0_CH0/I2C0_SCL [24] => SCL
PTE25/TPM0_CH1/I2C0_SDA [25] => SDA
PTE3/SPI1_MISO/SPI1_MOSI [4] => Left_B_J9_11 [Input]
PTE31/TPM0_CH4 [23]        => BUTTON [Input]
PTE4/SPI1_PCS0 [5]         => Right_B_J9_13 [Input]
PTE5 [6]                   => Right_A_J9_15 [Input]
TSI0_CH11/PTB18/TPM2_CH0 [53] => LED_RED [Output]
TSI0_CH12/PTB19/TPM2_CH1 [54] => LED_GREEN [Output]
TSI0_CH2/PTA1/UART0_RX/TPM2_CH0 [27] => OpenSDA_RxD [Input]
TSI0_CH2/PTA1/UART0_RX/TPM2_CH0 [27] => OpenSDA_RxD [Input]
TSI0_CH3/PTA2/UART0_TX/TPM2_CH1 [28] => OpenSDA_TxD [Output]
TSI0_CH3/PTA2/UART0_TX/TPM2_CH1 [28] => OpenSDA_TxD [Output]
TSI0_CH5/PTA4/I2C1_SDA/TPM0_CH1/NMI_b [30] => SensEn4 [Output]
==================================================================
```

./pdf/ProcessorExpert_SIGNALS.txt

6.4 Zumo Base Board Bill Of Material

```
Part            Value                   Device                  Package
                                Description
B1              BUZZER                  BUZZER                  BUZZER
BUTTON_OFF      MINI_PUSHBUTTON         MINI_PUSHBUTTON         MINI_PUSHBUTTON_FOOTPRINT
            Mini Pushbutton Switch, 2-Pin, SPST, 50mA
BUTTON_ON       MINI_PUSHBUTTON         MINI_PUSHBUTTON         MINI_PUSHBUTTON_FOOTPRINT
            Mini Pushbutton Switch, 2-Pin, SPST, 50mA
BUTTON_USER     MINI_PUSHBUTTON         MINI_PUSHBUTTON         MINI_PUSHBUTTON_FOOTPRINT
            Mini Pushbutton Switch, 2-Pin, SPST, 50mA
C1              100nF                   C-EUC0805               C0805
                                CAPACITOR, European symbol
C2              100nF                   C-EUC0805               C0805
                                CAPACITOR, European symbol
C3              100nF                   C-EUC0805               C0805
                                CAPACITOR, European symbol
C4              100nF                   C-EUC0805               C0805
                                CAPACITOR, European symbol
C5              1uF                     C-EUC0805               C0805
                                CAPACITOR, European symbol
C6              1uF                     C-EUC0805               C0805
                                CAPACITOR, European symbol
C7              100nF                   C-EUC0805               C0805
                                CAPACITOR, European symbol
C8              100nF                   C-EUC0805               C0805
                                CAPACITOR, European symbol
C9              1uF                     C-EUC0805               C0805
                                CAPACITOR, European symbol
C10             1uF                     C-EUC0805               C0805
                                CAPACITOR, European symbol
```

```
C11          1uF                  C-EUC0805            C0805
                          CAPACITOR, European symbol
C12          100nF                C-EUC0805            C0805
                          CAPACITOR, European symbol
C13          1uF                  C-EUC0805            C0805
                          CAPACITOR, European symbol
C15          100nF                C-EUC0805            C0805
                          CAPACITOR, European symbol
C16          220uF                CPOL-EU153CLV-0605   153CLV-0605
                     POLARIZED CAPACITOR, European symbol
C17          220uF                CPOL-EU153CLV-0605   153CLV-0605
                     POLARIZED CAPACITOR, European symbol
C18          220uF                CPOL-EU153CLV-0605   153CLV-0605
                     POLARIZED CAPACITOR, European symbol
C19          220uF                CPOL-EU153CLV-0605   153CLV-0605
                     POLARIZED CAPACITOR, European symbol
C20          100nF                C-EUC0805            C0805
                          CAPACITOR, European symbol
C21          1uF                  C-EUC0805            C0805
                          CAPACITOR, European symbol
C22          100nF                C-EUC0805            C0805
                          CAPACITOR, European symbol
D_1          ZHCS400              SCHOTTKY_ZHCS400     SOD-323
D_2          ZHCS400              SCHOTTKY_ZHCS400     SOD-323
FET_N        NFET_SOT23           NFET_SOT23           SOT-23
FET_P        PFET_SOT23           PFET_SOT23           SOT-23
FRDM1                             FRDM-KL25ZARDUINO    FRDM-KL25Z
                     For creating FRDM-KL25Z shields
J_BATT_1     BATTERY_CONNECTION   BATTERY_CONNECTION   BATTERY_CONNECTION_FOOTPRINT
          Battery Connection for the Zuma Robot
J_BT_BOARD   BLUETOOTH_BOARD      BLUETOOTH_BOARD      BT_BOARD_FOOTPRINT
                Bluetooth Board V1.05
```

```
J_DS_BL          POLOLU_DIST_PROX_SENS     POLOLU_DIST_PROX_SENS     POLOLU_DIST_PROX_SENS_FOOTPRINT
      Pololu Digital Distance and Proximity Sensors; Pololu Items Nr. 1134; 1132; 2460; 2461
J_DS_BR          POLOLU_DIST_PROX_SENS     POLOLU_DIST_PROX_SENS     POLOLU_DIST_PROX_SENS_FOOTPRINT
      Pololu Digital Distance and Proximity Sensors; Pololu Items Nr. 1134; 1132; 2460; 2461
J_DS_FL          POLOLU_DIST_PROX_SENS     POLOLU_DIST_PROX_SENS     POLOLU_DIST_PROX_SENS_FOOTPRINT
      Pololu Digital Distance and Proximity Sensors; Pololu Items Nr. 1134; 1132; 2460; 2461
J_DS_FR          POLOLU_DIST_PROX_SENS     POLOLU_DIST_PROX_SENS     POLOLU_DIST_PROX_SENS_FOOTPRINT
      Pololu Digital Distance and Proximity Sensors; Pololu Items Nr. 1134; 1132; 2460; 2461
J_ENCODER_LEFT   ENCODER                   ENCODER                   ENCODER_FOOTPRINT
                     Encoder for Pololu Wheel 42x19mm
J_ENCODER_RIGHT  ENCODER                   ENCODER                   ENCODER_FOOTPRINT
                     Encoder for Pololu Wheel 42x19mm
J_I2C            I2C_HEADER                I2C_HEADER                I2C_HEADER_FOOTPRINT
J_MOTOR_DRIVER   MOTOR_DRIVER              MOTOR_DRIVER              MOTOR_DRIVER_FOOTPRINT
                 DRV8835 Dual Motor Driver Carrier
J_MOTOR_LEFT     MOTOR_CONNECTOR           MOTOR_CONNECTOR           MOTOR_CONNECTOR_FOOTPRINT
             Connector for a Motor
J_MOTOR_RIGHT    MOTOR_CONNECTOR           MOTOR_CONNECTOR           MOTOR_CONNECTOR_FOOTPRINT
             Connector for a Motor
J_REG_5V         5V_VOLTAGE_REGULATOR      5V_VOLTAGE_REGULATOR      5V_VOLTAGE_REGULATOR
                   Polulu 5V Step-Up/Step-Down Voltage REgulator S7V7F5
J_REG_9V         9V_VOLTAGE_REGULATOR      9V_VOLTAGE_REGULATOR      9V_VOLTAGE_REGULATOR
                   Polulu 9V Step-Up Voltage Regulator U3V12F9
J_SENSOR_ARRAY   REFLECTANCE_SENSOR_ARRAY REFLECTANCE_SENSOR_ARRAY
   REFLECTANCE_SENSOR_ARRAY_FOOTPRINT Zumo Reflectance Sensor Array Item #1419
J_TRANSCEIVER    MC1320X_AND_NRF24L01      MC1320X_AND_NRF24L01      MC1320X_AND_NRF24L01_FOOTPRINT
       With this Device, it is possible to use the NRF24L01 or the MC1320x 802.15.4 transceiver
J_US             HC-SR04                   HC-SR04                   HC-SR04_FOOTPRINT
                     Ultrasonic Sensor HC-SR04
LED_B1           LED_PLCC-2                LED_PLCC-2                PLCC-2
LED_U1           LED_PLCC-2                LED_PLCC-2                PLCC-2
```

```
R1          15kOhm          R-EU_R0805          R0805
                      RESISTOR, European symbol
R2          27kOhm          R-EU_R0805          R0805
                      RESISTOR, European symbol
R3          39Ohm           R-EU_R0805          R0805
                      RESISTOR, European symbol
R4          100kOhm         R-EU_R0805          R0805
                      RESISTOR, European symbol
R5          56kOhm          R-EU_R0805          R0805
                      RESISTOR, European symbol
R6          10kOhm          R-EU_R0805          R0805
                      RESISTOR, European symbol
R7          300Ohm          R-EU_R0805          R0805
                      RESISTOR, European symbol
R8          750Ohm          R-EU_R0805          R0805
                      RESISTOR, European symbol
R10         1kOhm           R-EU_R0805          R0805
                      RESISTOR, European symbol
SJ3                         SJ2W                SJ_2
                       SMD solder JUMPER
ZD1         3.6V            ZDIODE_SOD323       SOD-323
```

"./pdf/INTRO Robot Motherboard BOM.txt"

6.5 FRDM-KL25Z RevD Schematics

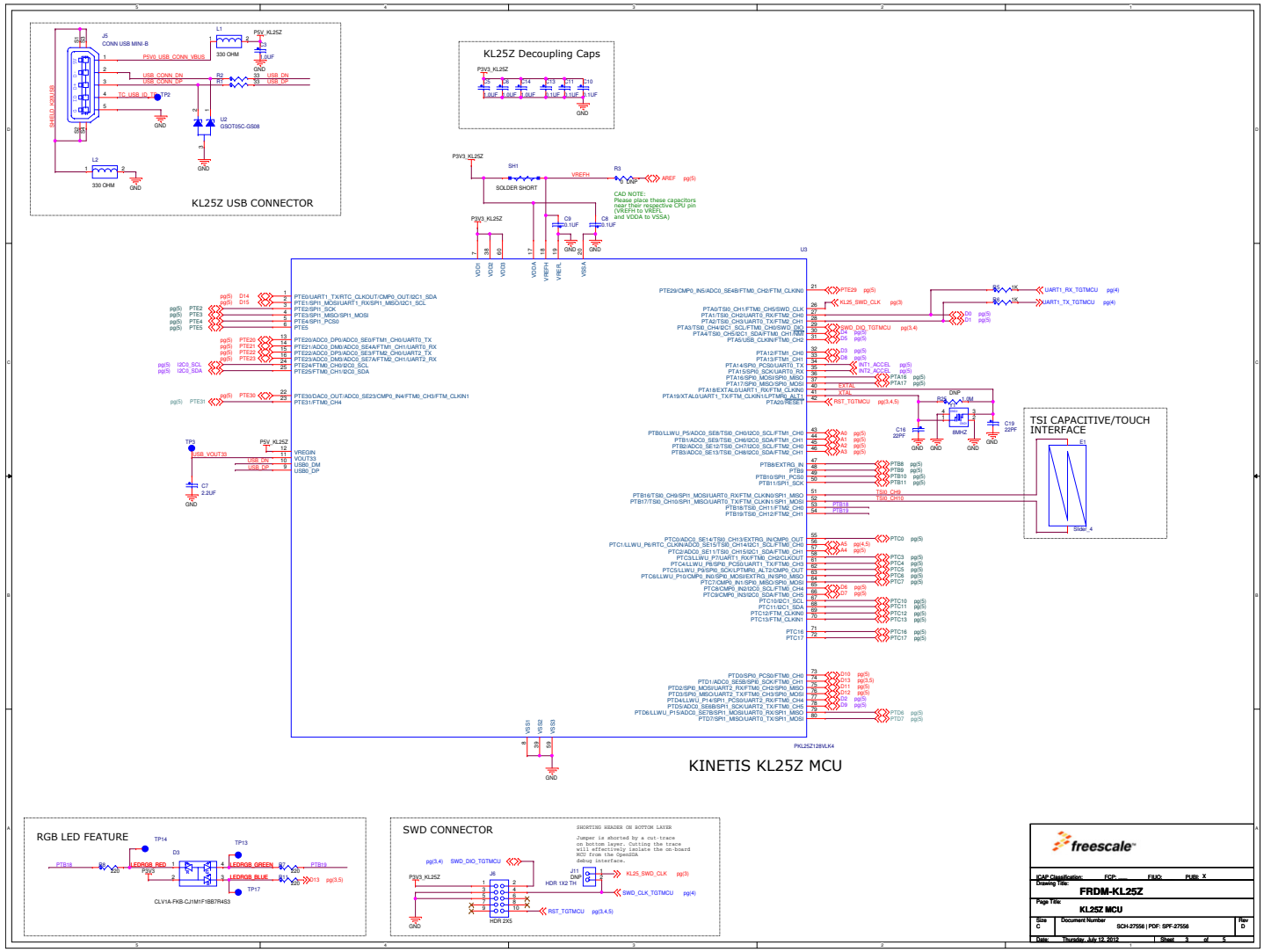
KL25Z USB CONNECTOR
KL25Z Decoupling Caps
KINETIS KL25Z MCU
TSI CAPACITIVE/TOUCH INTERFACE
RGB LED FEATURE
SWD CONNECTOR
freescale
FRDM-KL25Z
KL25Z MCU

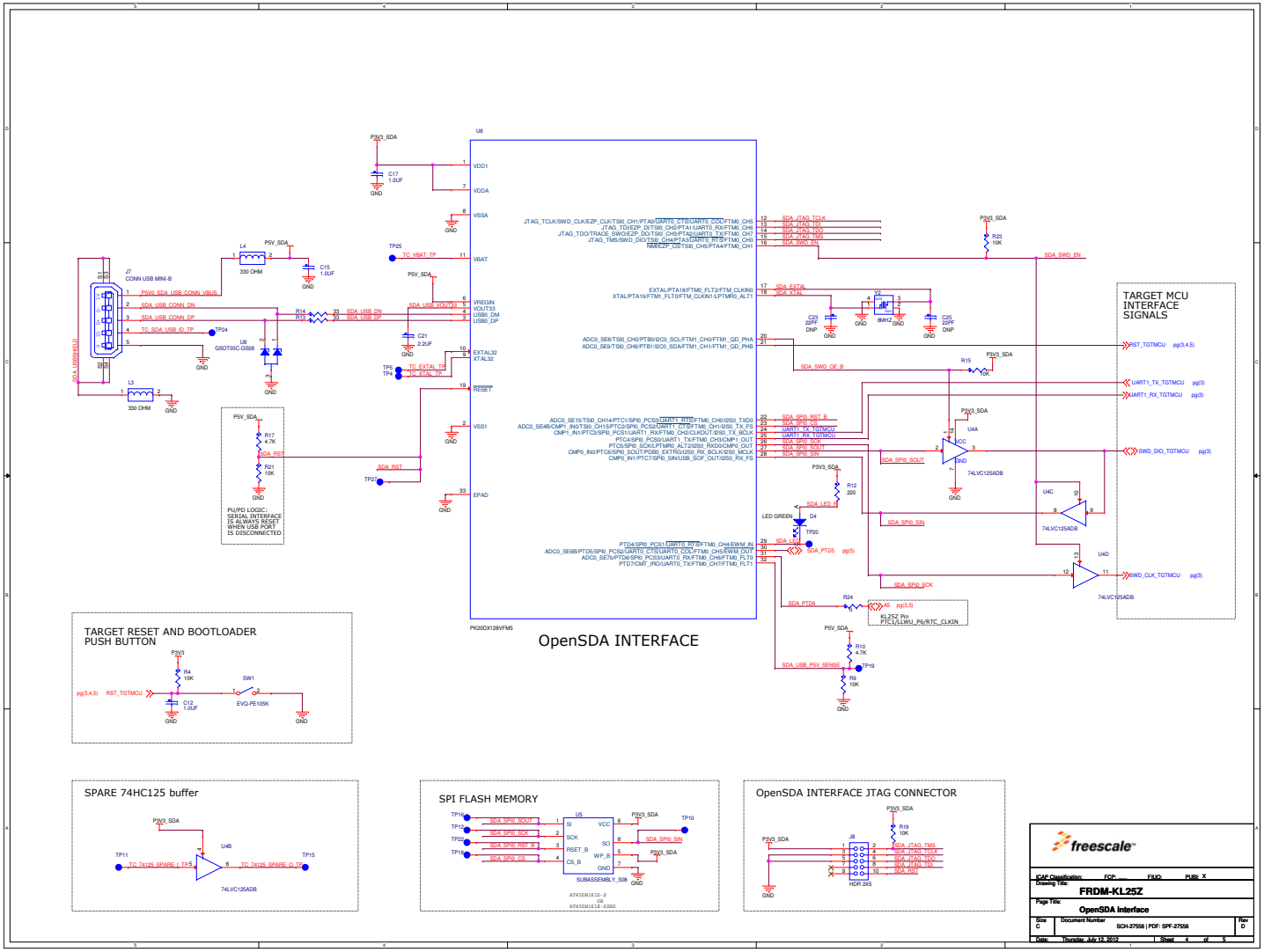
OpenSDA INTERFACE
PK20DX128VFM5
TARGET MCU INTERFACE SIGNALS
TARGET RESET AND BOOTLOADER PUSH BUTTON
SPARE 74HC125 buffer
SPI FLASH MEMORY
OpenSDA INTERFACE JTAG CONNECTOR
PU/PD LOGIC: SERIAL INTERFACE IS ALWAYS RESET WHEN USB PORT IS DISCONNECTED
KL25Z Pin PTC1/LLWU_P6/RTC_CLKIN
CONN USB MINI-B
freescale
ICAP Classification: FCP: FNUO: PUBI: X
Drawing Title: FRDM-KL25Z
Page Title: OpenSDA Interface
Size C
Document Number SCH-27558 | PDF: SPF-27558
Rev D
Date: Thursday, July 19, 2012
Sheet 4 of 5

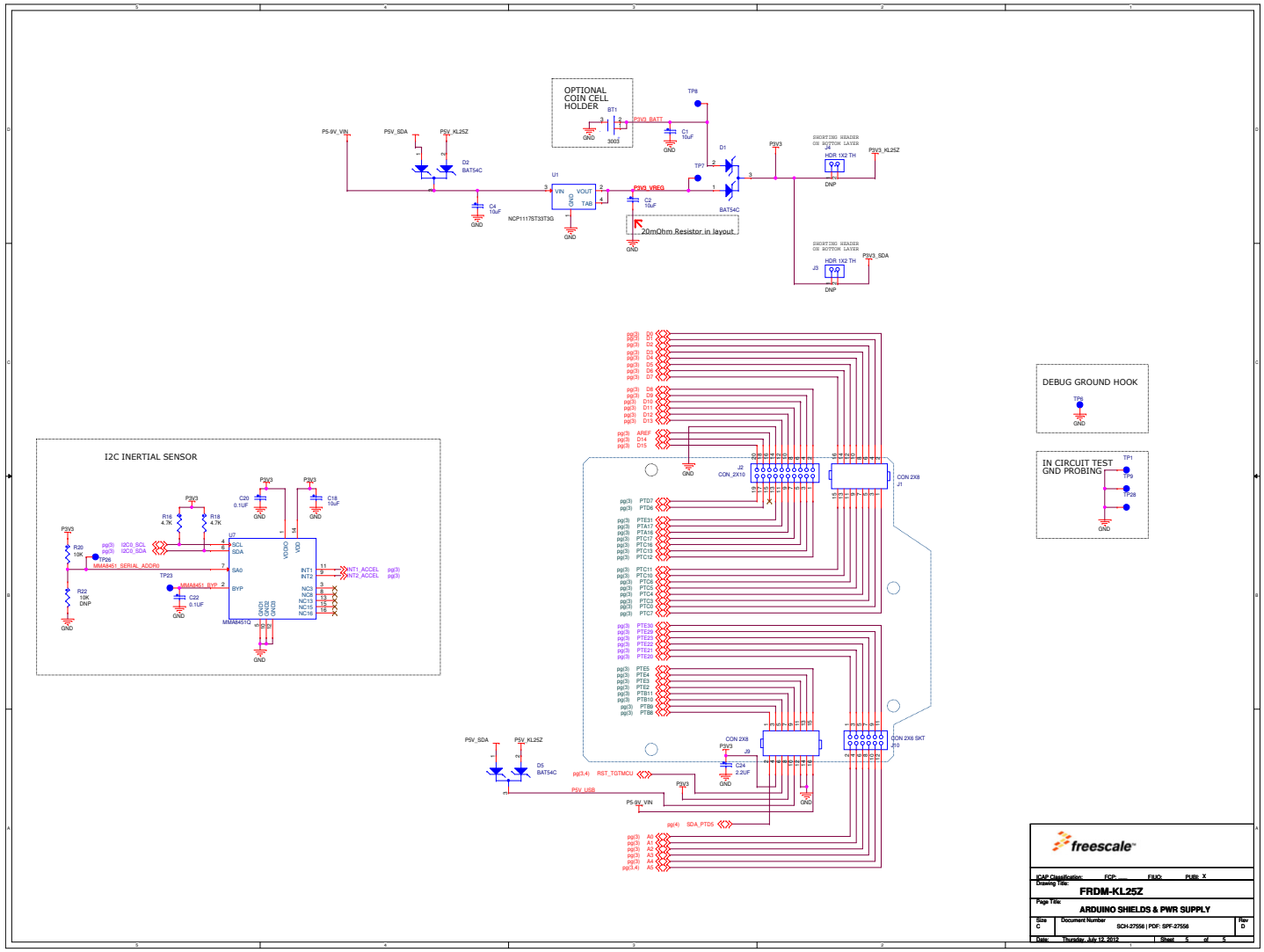
OPTIONAL COIN CELL HOLDER
BT1
3003
P3V3_BATT
C1 10uF
TP8
P5-9V_VIN
P5V_SDA
P5V_KL25Z
D2 BAT54C
C4 10uF
U1
VIN VOUT
EN TAB
NCP1117ST33T3G
P3V3_VREG
C2 10uF
20mOhm Resistor in layout
TP7
D1
BAT54C
P3V3
SHORTING HEADER ON BOTTOM LAYER
J4 HDR 1X2 TH
DNP
P3V3_KL25Z
J3 HDR 1X2 TH
P3V3_SDA
I2C INERTIAL SENSOR
R16 4.7K
R18 4.7K
C20 0.1UF
C18 10uF
U7
SCL
SDA
SA0
BYP
VDDIO
VDD
INT1
INT2
NC3
NC8
NC13
NC15
NC16
GND1
GND2
GND3
MMA8451Q
R20 10K
R22 10K DNP
TP26
TP23
C22 0.1UF
MMA8451_SERIAL_ADDR0
MMA8451_BYP
I2C0_SCL
I2C0_SDA
INT1_ACCEL
INT2_ACCEL
J2 CON_2X10
CON 2X8 J1
CON 2X8 J9
CON 2X6 SKT J10
C24 2.2UF
D5 BAT54C
RST_TGTMCU
P5V_USB
SDA_PTD5
DEBUG GROUND HOOK
TP6
IN CIRCUIT TEST GND PROBING
TP1
TP9
TP28
GND
freescale
ICAP Classification: FCP: FIUO: PUBR: X
Drawing Title: FRDM-KL25Z
Page Title: ARDUINO SHIELDS & PWR SUPPLY
Size C
Document Number SCH-27558 | PDF: SPF-27558
Rev D
Date: Thursday, July 19, 2012
Sheet 5 of 5

6.6 FRDM-KL25Z RevE Schematics

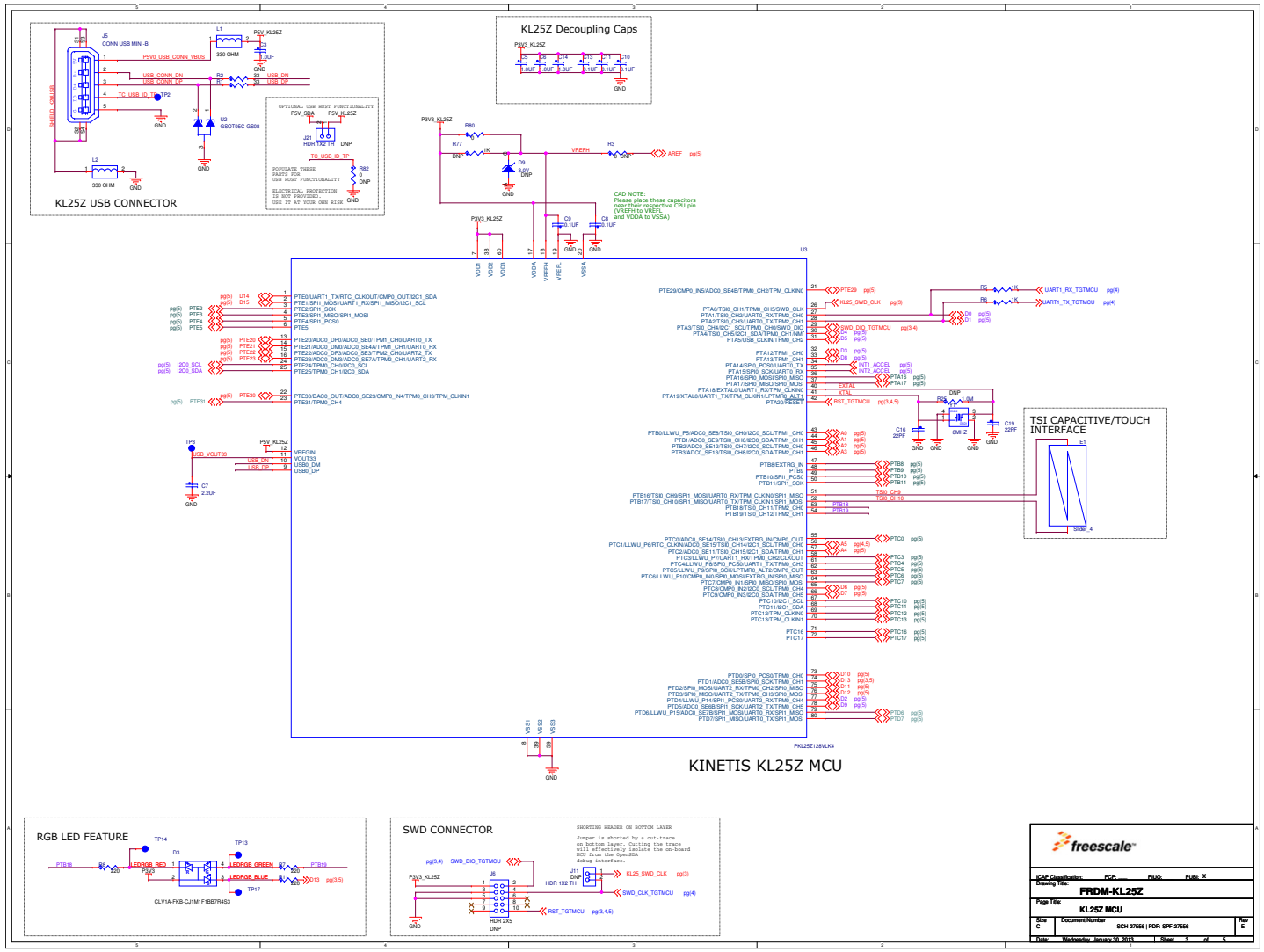
KL25Z USB CONNECTOR
KL25Z Decoupling Caps
KINETIS KL25Z MCU
TSI CAPACITIVE/TOUCH INTERFACE
RGB LED FEATURE
SWD CONNECTOR
freescale
FRDM-KL25Z
KL25Z MCU

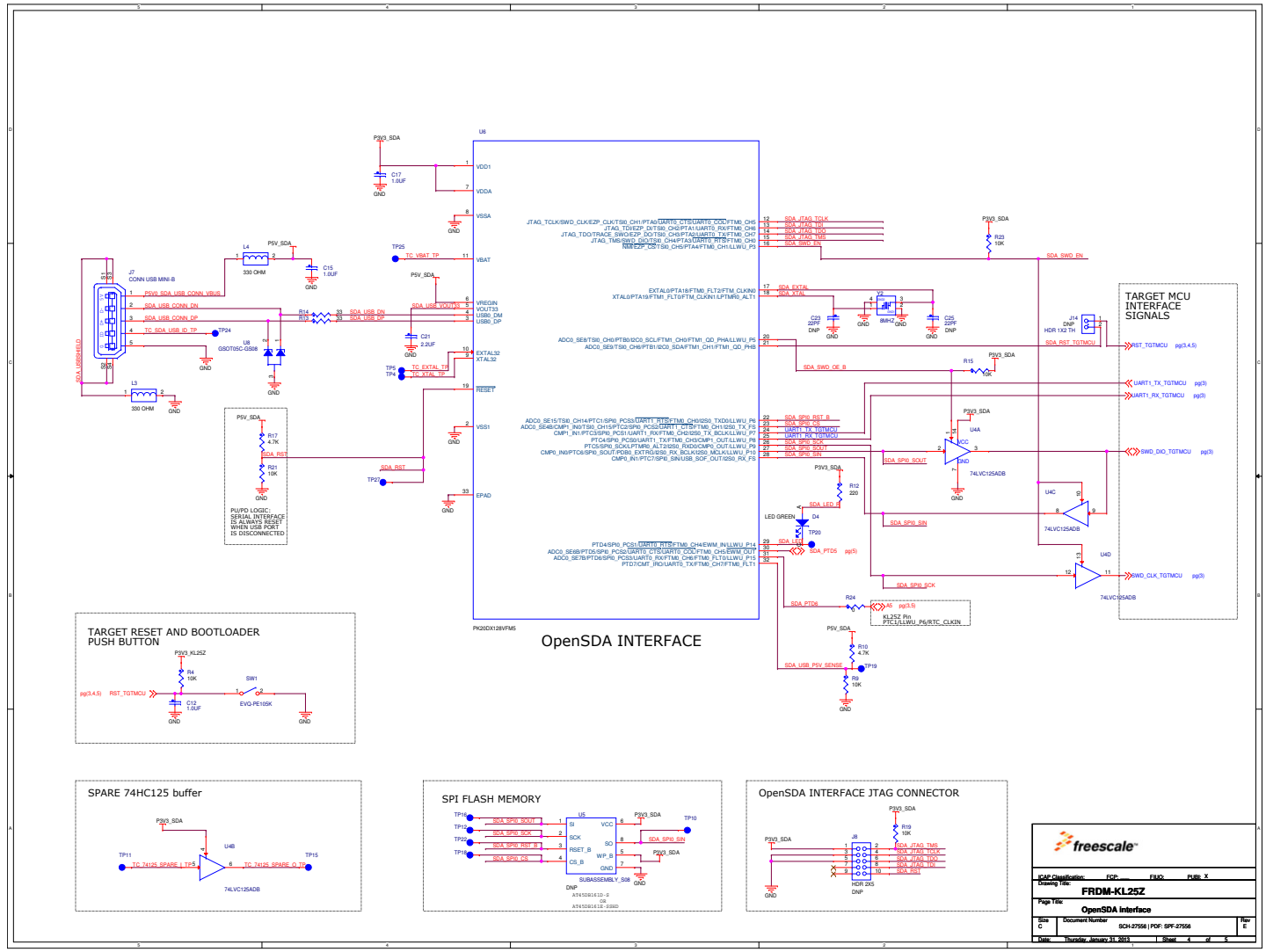
OpenSDA INTERFACE
TARGET MCU INTERFACE SIGNALS
TARGET RESET AND BOOTLOADER PUSH BUTTON
SPARE 74HC125 buffer
SPI FLASH MEMORY
OpenSDA INTERFACE JTAG CONNECTOR
PK20DX128VFM5
CONN USB MINI-B
330 OHM
74LVC125ADB
EVQ-PE105K
freescale
FRDM-KL25Z
OpenSDA Interface
SCH-27558 | PDF: SPF-27558
Thursday, January 31, 2013

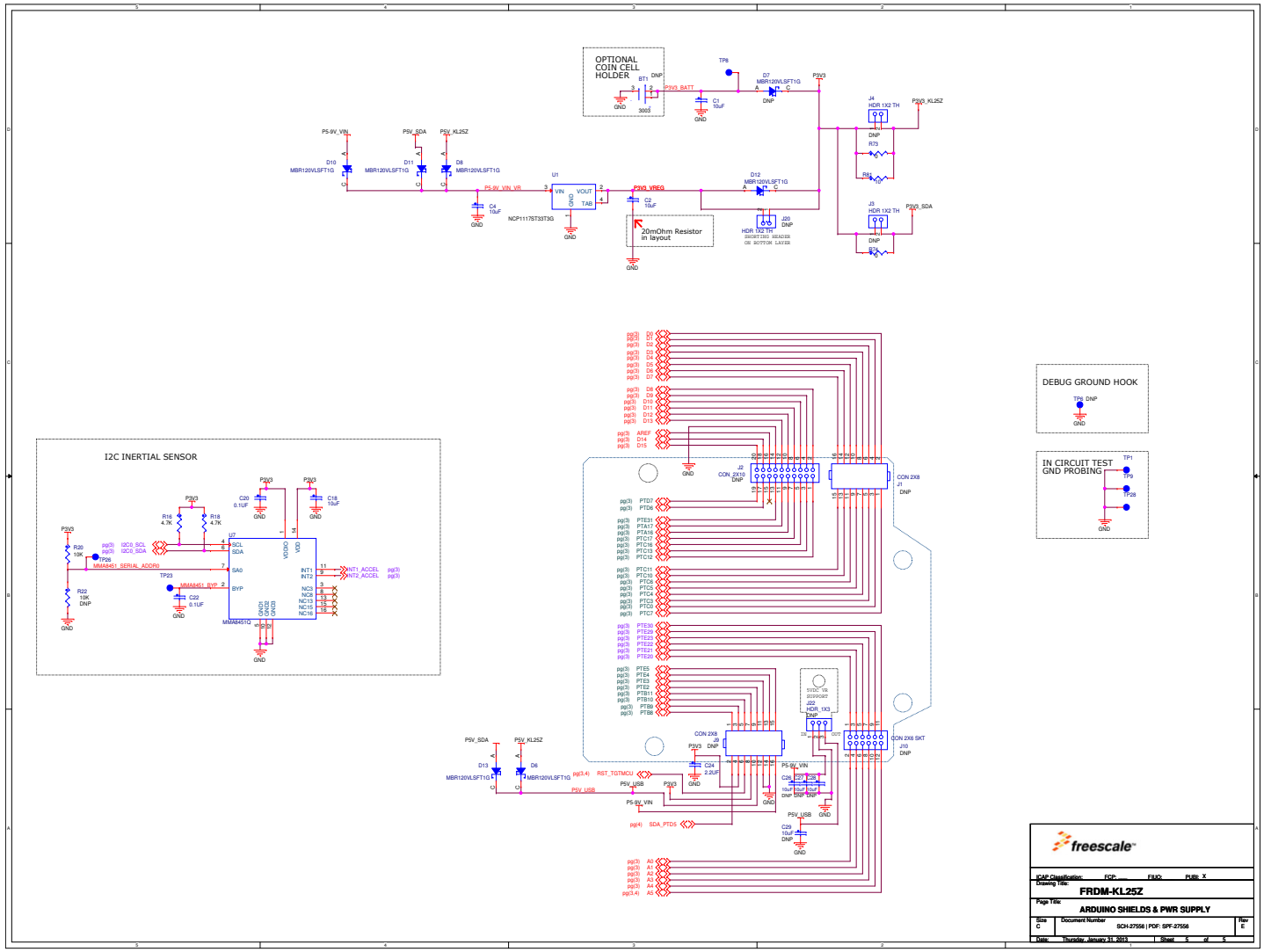
OPTIONAL COIN CELL HOLDER
BT1 DNP
3003
P3V3_BATT
C1 10uF
TP8
D7 MBR120VLSFT1G
P3V3
J4 HDR 1X2 TH
P3V3_KL25Z
R73 DNP
R84 0
J3 HDR 1X2 TH
P3V3_SDA
R74 DNP
D10 MBR120VLSFT1G
D11 MBR120VLSFT1G
D8 MBR120VLSFT1G
P5-9V_VIN
P5V_SDA
P5V_KL25Z
P5-9V_VIN_VR
C4 10uF
U1
VIN
VOUT
TAB
NCP1117ST33T3G
P3V3_VREG
C2 10uF
20mOhm Resistor in layout
D12 MBR120VLSFT1G
J20 DNP
HDR 1X2 TH
INSERTING SENSOR ON BOTTOM LAYER
GND
I2C INERTIAL SENSOR
R20 10K
R22 10K DNP
TP26
MMA8451_SERIAL_ADDR0
TP23
MMA8451_BYP
C22 0.1UF
R16 4.7K
R18 4.7K
C20 0.1UF
C18 10uF
U7
SCL
SDA
SA0
BYP
VDDIO
VDD
INT1
INT2
NC3
NC8
NC13
NC15
NC16
GND1
GND2
GND3
MMA8451Q
I2C0_SCL
I2C0_SDA
INT1_ACCEL
INT2_ACCEL
CON 2X10 DNP
J2
CON 2X8 J1 DNP
PTD7
PTD6
PTE31
PTA17
PTA16
PTC17
PTC16
PTC13
PTC12
PTC11
PTC10
PTC8
PTC5
PTC4
PTC3
PTC2
PTC7
PTE30
PTE29
PTE23
PTE22
PTE21
PTE5
PTE4
PTE3
PTE2
PTE1
PTB10
PTB9
PTB8
AREF
D14
D15
D0
D1
D2
D3
D4
D5
D6
D7
D8
D9
D10
D11
D12
D13
A0
A1
A2
A3
A4
A5
5V2C_V8 2199PORT
J22 HDR_1X3 DNP
CON 2X8 J9 DNP
CON 2X6 SKT J10 DNP
C24 2.2UF
C26 10uF DNP
C27 10uF DNP
C28 10uF DNP
C29 10uF DNP
RST_TGTMCU
P5V_USB
SDA_PTD5
DEBUG GROUND HOOK
TP6 DNP
IN CIRCUIT TEST GND PROBING
TP1
TP9
TP28
freescale
ICAP Classification: FCP: FIUO: PUBX: X
Drawing Title: FRDM-KL25Z
Page Title: ARDUINO SHIELDS & PWR SUPPLY
Size C
Document Number SCH-27558 | PDF: SPF-27558
Rev E
Date: Thursday, January 31, 2013
Sheet 5 of 5

References

[1] Pololu Robotics & Electronics.
Pololu.
Pololu #1132, Sep 2013.

[2] Pololu Robotics & Electronics.
Pololu 38 khz ir proximity sensor, fixed gain, high brightness.
Pololu #2460, Sep 2013.

[3] Pololu Robotics & Electronics.
Pololu 38 khz ir proximity sensor, fixed gain, low brightness.
Pololu #2461, Sep 2013.

[4] Pololu Robotics & Electronics.
Pololu 5v dc/dc converter.
Pololu #2119, Sep 2013.

[5] Pololu Robotics & Electronics.
Pololu 75:1 micro metal gearmotors.
Pololu #2361, Sep 2013.

[6] Pololu Robotics & Electronics.
Pololu 9v dc/dc converter.
Pololu #2116, Sep 2013.

[7] Pololu Robotics & Electronics.
Pololu carrier with sharp gp2y0d810z0f digital distance sensor 10cm.
Pololu #1134, Sep 2013.

[8] Pololu Robotics & Electronics.
Pololu motor drv8835 module.
Pololu #2135, Sep 2013.

[9] Pololu Robotics & Electronics.
Pololu position quadrature encoder.
Pololu #1217, Sep 2013.

[10] Pololu Robotics & Electronics.
Pololu zumo blade.
Pololu #1410, Sep 2013.

[11] Pololu Robotics & Electronics.
Pololu zumo chassis kit.
Pololu #1418, Sep 2013.

[12] Pololu Robotics & Electronics.
Pololu zumo reflectance sensor array.
Pololu #1410, Sep 2013.