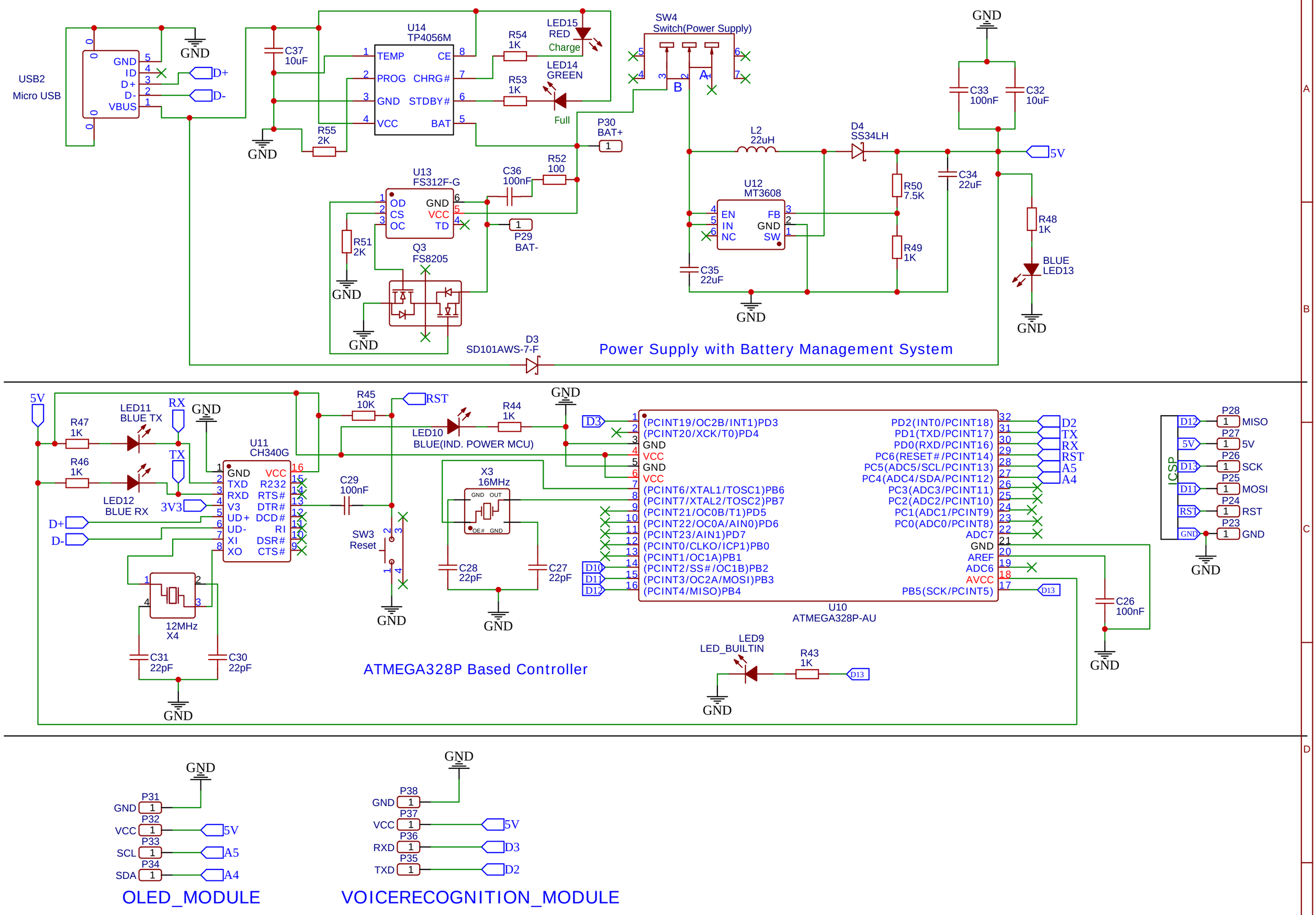

TITLE: Left_HERv2		REV: 1.0
EasyEDA	Company: Your Company	Sheet: 1/1
	Date: 2020-02-07 Drawn By: erwin.bonto34	