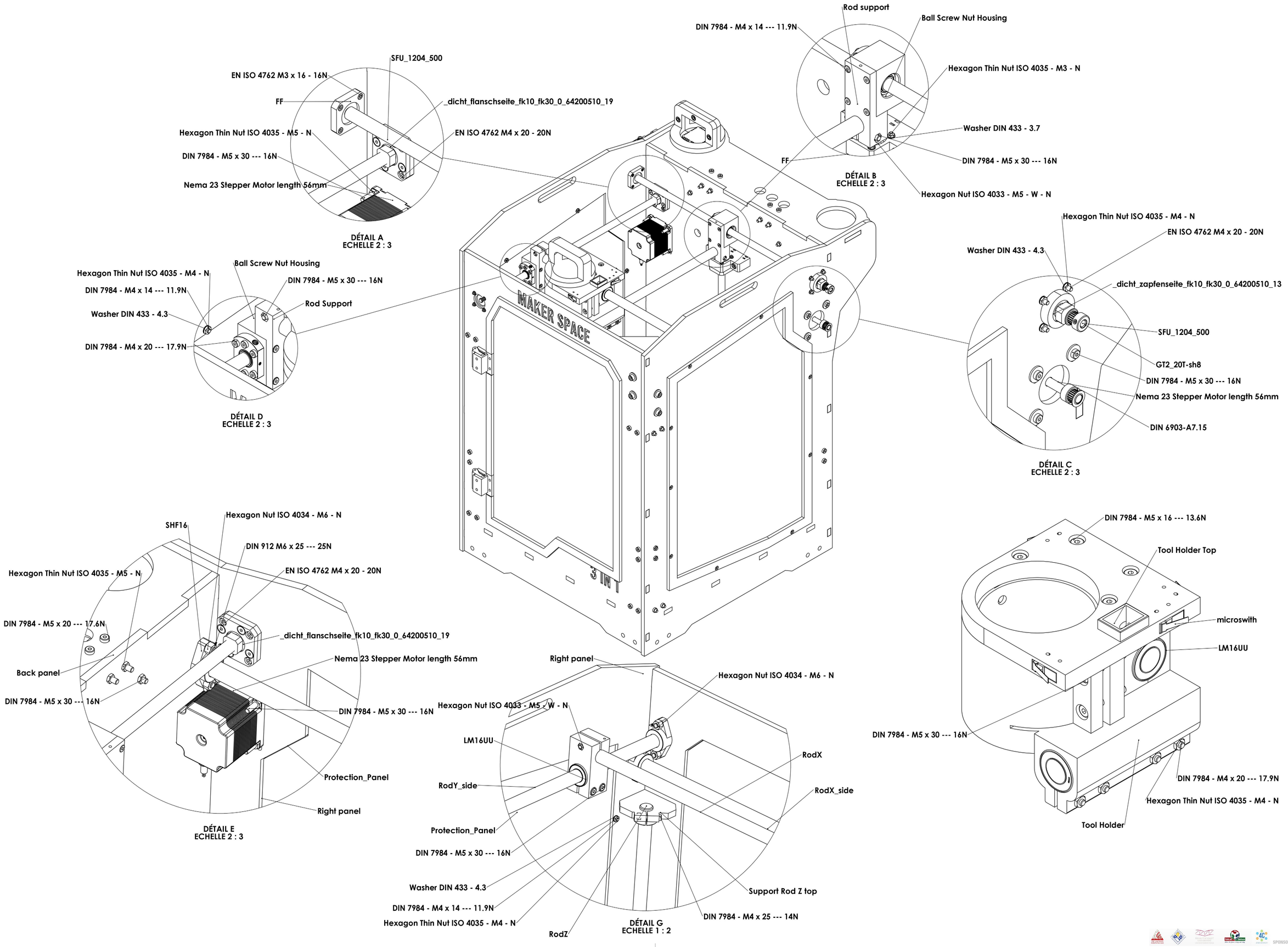
MAKER SPACE
DÉTAIL A
ECHELLE 2 : 3
SFU_1204_500
EN ISO 4762 M3 x 16 - 16N
FF
_dicht_flanschseite_fk10_fk30_0_64200510_19
Hexagon Thin Nut ISO 4035 - M5 - N
EN ISO 4762 M4 x 20 - 20N
DIN 7984 - M5 x 30 --- 16N
Nema 23 Stepper Motor length 56mm
DÉTAIL B
ECHELLE 2 : 3
Rod support
Ball Screw Nut Housing
DIN 7984 - M4 x 14 --- 11.9N
Hexagon Thin Nut ISO 4035 - M3 - N
Washer DIN 433 - 3.7
DIN 7984 - M5 x 30 --- 16N
FF
Hexagon Nut ISO 4033 - M5 - W - N
DÉTAIL D
ECHELLE 2 : 3
Hexagon Thin Nut ISO 4035 - M4 - N
Ball Screw Nut Housing
DIN 7984 - M5 x 30 --- 16N
DIN 7984 - M4 x 14 --- 11.9N
Rod Support
Washer DIN 433 - 4.3
DIN 7984 - M4 x 20 --- 17.9N
DÉTAIL C
ECHELLE 2 : 3
Hexagon Thin Nut ISO 4035 - M4 - N
EN ISO 4762 M4 x 20 - 20N
Washer DIN 433 - 4.3
_dicht_zapfenseite_fk10_fk30_0_64200510_13
SFU_1204_500
GT2_20T-sh8
DIN 7984 - M5 x 30 --- 16N
Nema 23 Stepper Motor length 56mm
DIN 6903-A7.15
DÉTAIL E
ECHELLE 2 : 3
Hexagon Nut ISO 4034 - M6 - N
SHF16
DIN 912 M6 x 25 --- 25N
Hexagon Thin Nut ISO 4035 - M5 - N
EN ISO 4762 M4 x 20 - 20N
DIN 7984 - M5 x 20 --- 17.6N
_dicht_flanschseite_fk10_fk30_0_64200510_19
Nema 23 Stepper Motor length 56mm
Back panel
DIN 7984 - M5 x 30 --- 16N
DIN 7984 - M5 x 30 --- 16N
Protection_Panel
Right panel
DÉTAIL G
ECHELLE 1 : 2
Right panel
Hexagon Nut ISO 4034 - M6 - N
Hexagon Nut ISO 4033 - M5 - W - N
LM16UU
RodX
RodY_side
RodX_side
Protection_Panel
DIN 7984 - M5 x 30 --- 16N
Support Rod Z top
Washer DIN 433 - 4.3
DIN 7984 - M4 x 14 --- 11.9N
DIN 7984 - M4 x 25 --- 14N
Hexagon Thin Nut ISO 4035 - M4 - N
RodZ
DIN 7984 - M5 x 16 --- 13.6N
Tool Holder Top
microswith
LM16UU
DIN 7984 - M5 x 30 --- 16N
DIN 7984 - M4 x 20 --- 17.9N
Hexagon Thin Nut ISO 4035 - M4 - N
Tool Holder

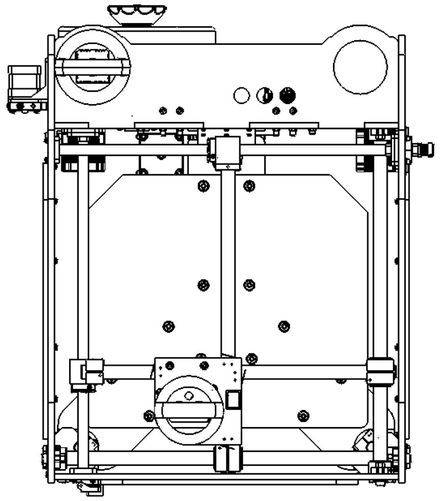

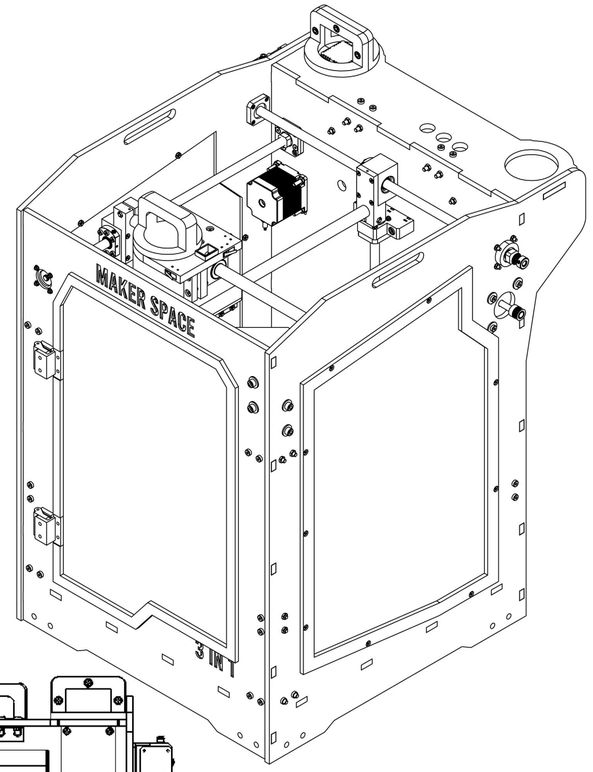
MAKER SPACE
3 IN 1

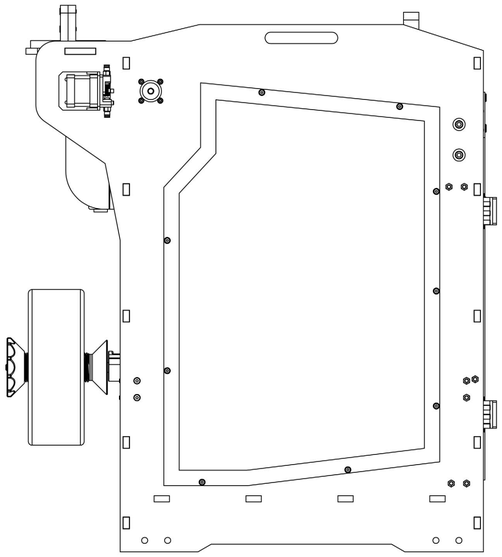

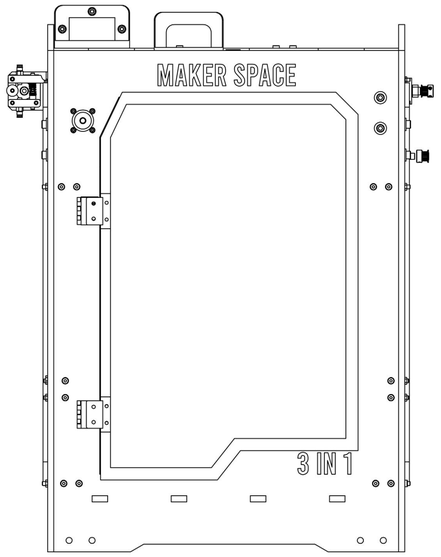
MAKER SPACE
3 IN 1

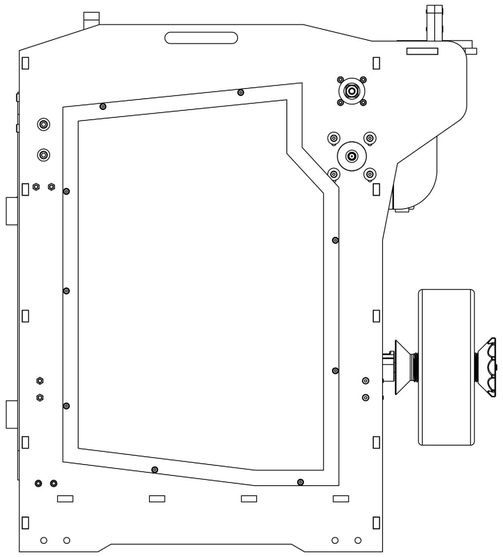

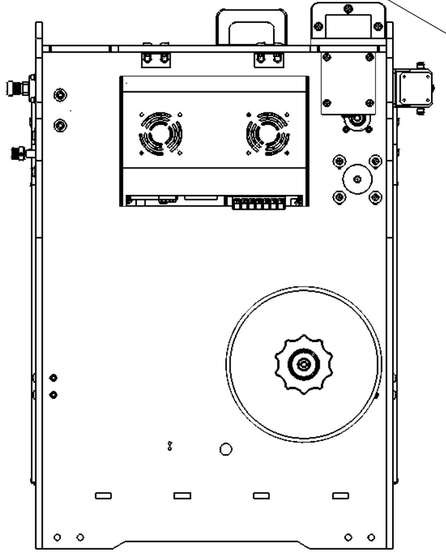

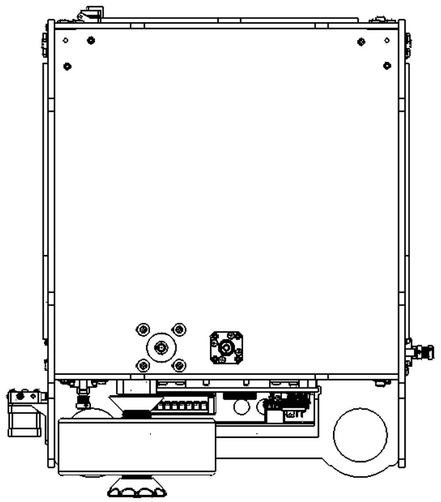

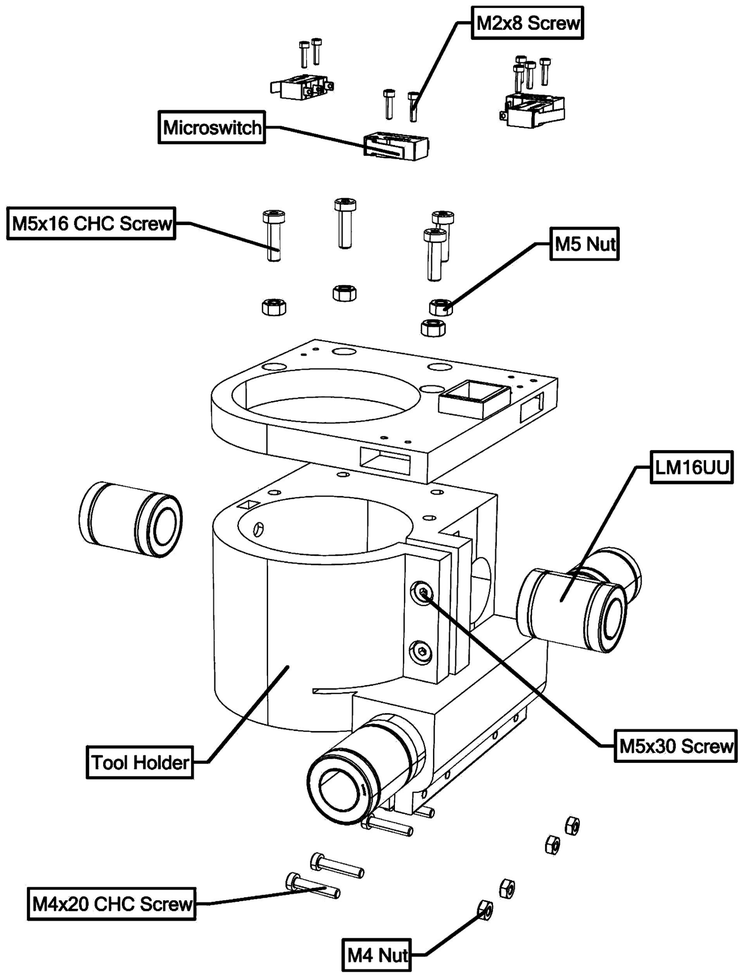

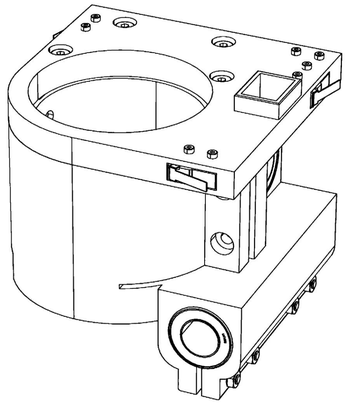

1

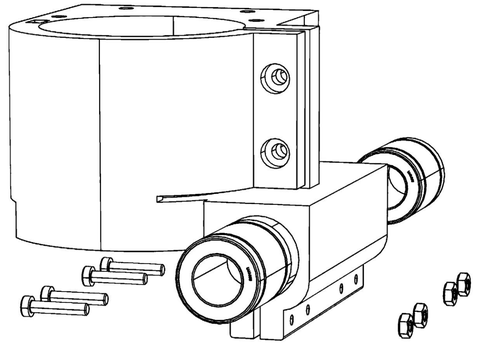

2

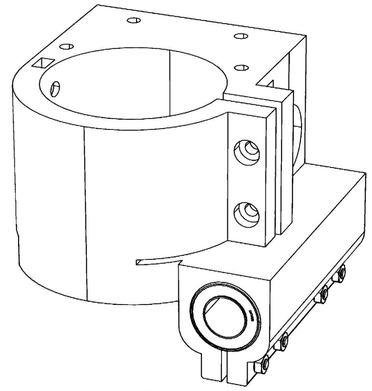

3

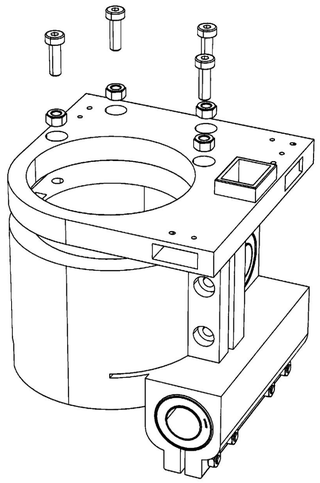

4

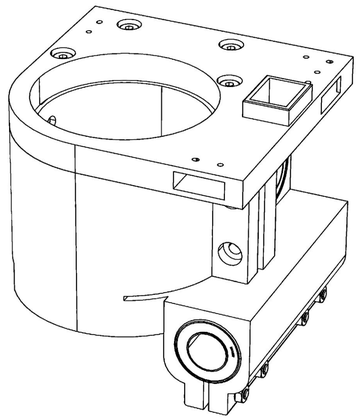

5

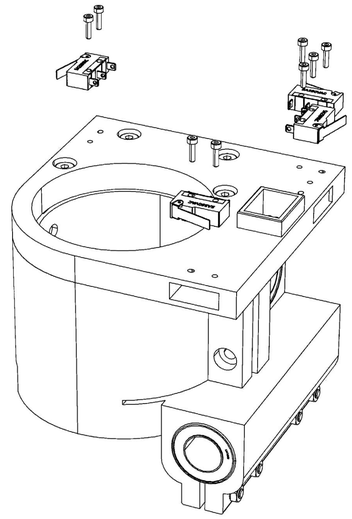

6

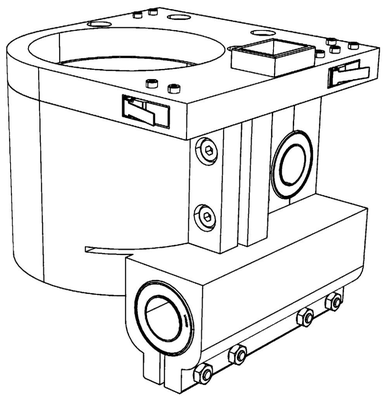

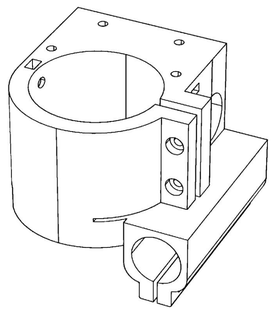

TOOL HOLDER
BUILD TIME: 30h13min
PRINT SPEED: 60 mm/s
MATERIAL: PLA
SUPPORT: YES
INFILL: 35%

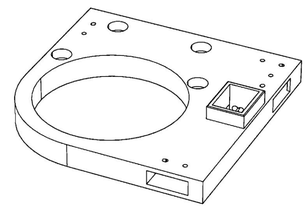

TOOL HOLDER TOP
BUILD TIME: 5h30min
PRINT SPEED: 60 mm/s
MATERIAL: PLA
SUPPORT: YES
INFILL: 15%

3D Print Tool

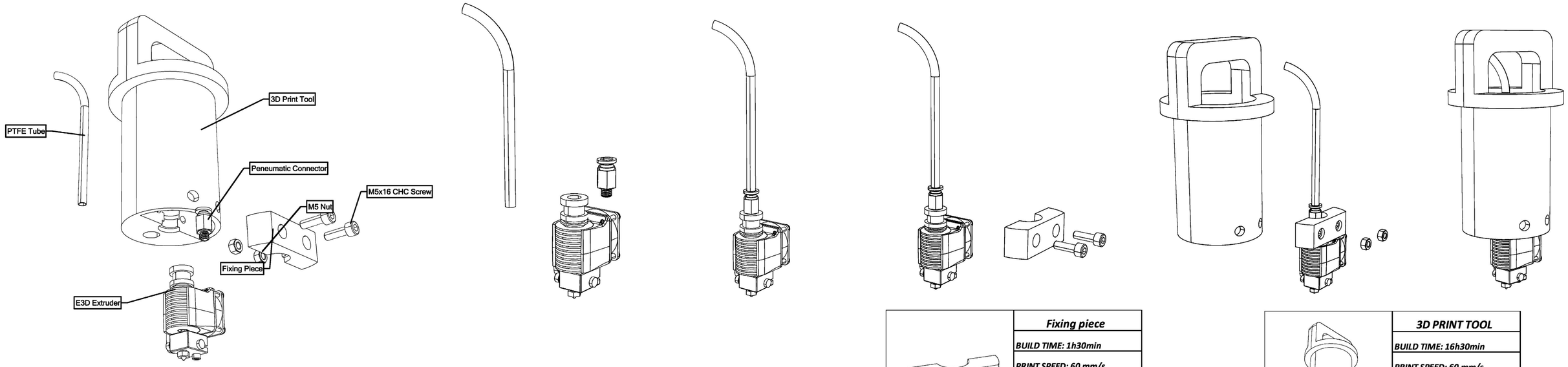

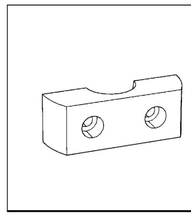

Fixing piece
BUILD TIME: 1h30min
PRINT SPEED: 60 mm/s
MATERIAL: PLA
SUPPORT: YES
INFILL: 30%

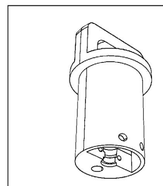

3D PRINT TOOL
BUILD TIME: 16h30min
PRINT SPEED: 60 mm/s
MATERIAL: PLA
SUPPORT: YES
INFILL: 20%

Laser Tool

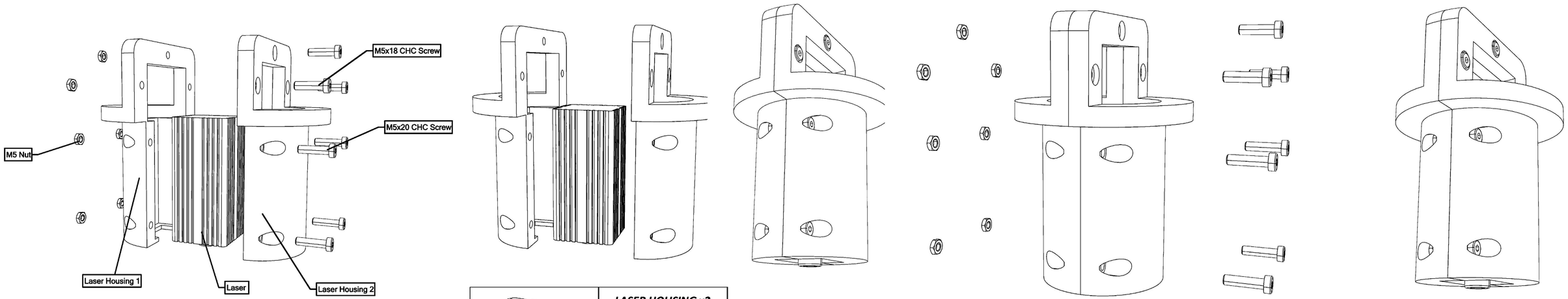

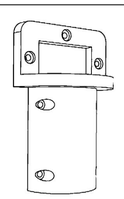

LASER HOUSING x2
BUILD TIME: 6h10min
PRINT SPEED: 60 mm/s
MATERIAL: PLA
SUPPORT: YES
INFILL: 15%

SPONSORED BY Bundesministerium für Bildung und Forschung

Bed Assembly

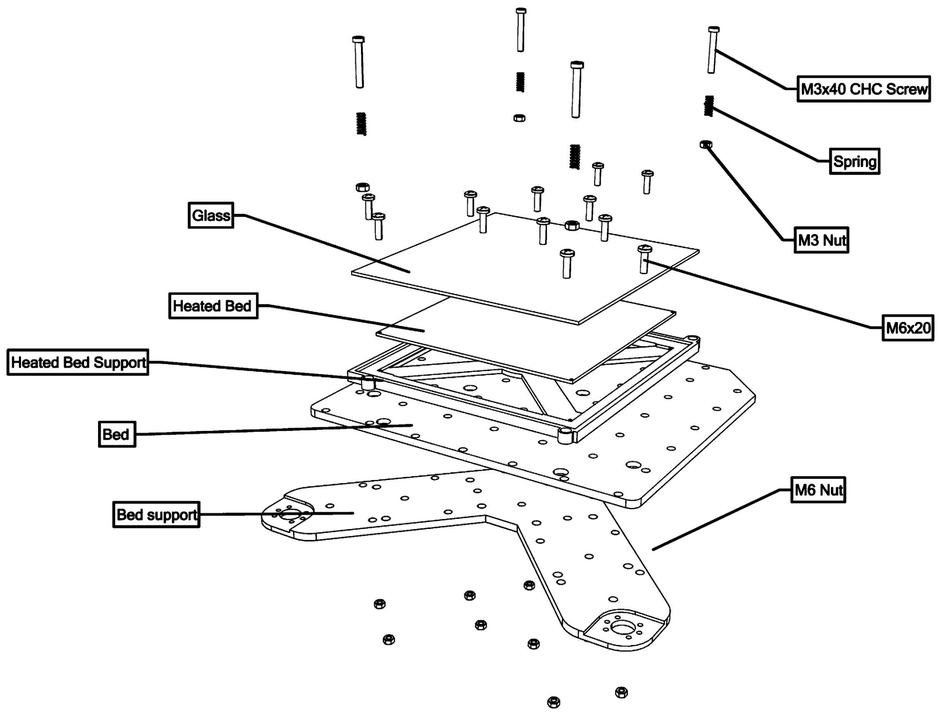

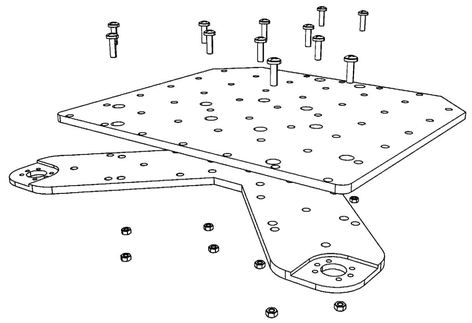

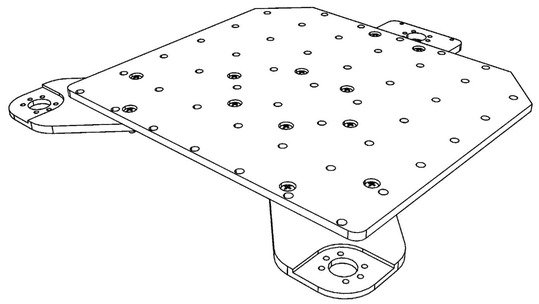

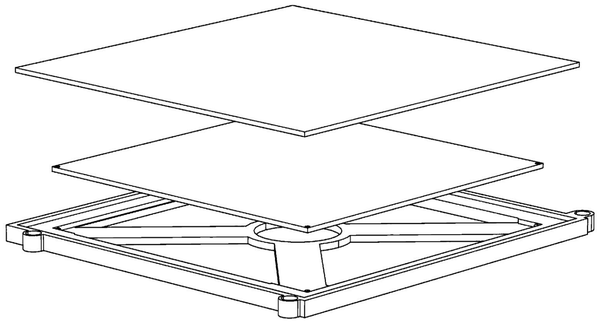

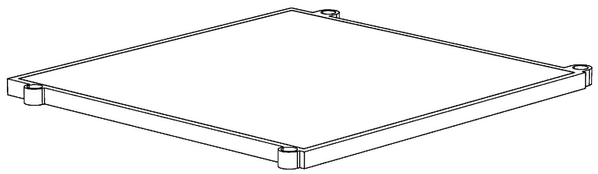

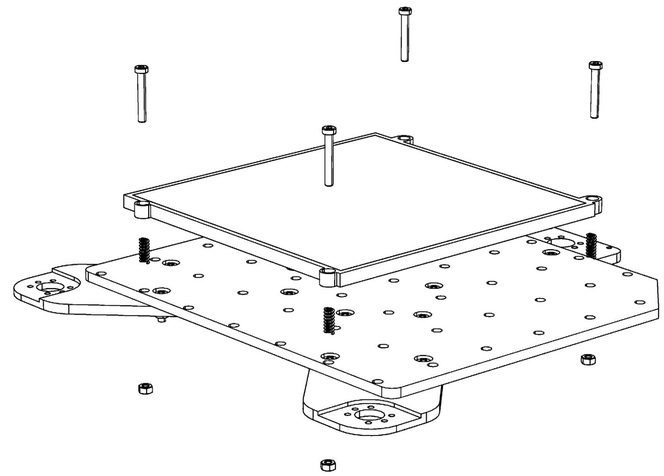

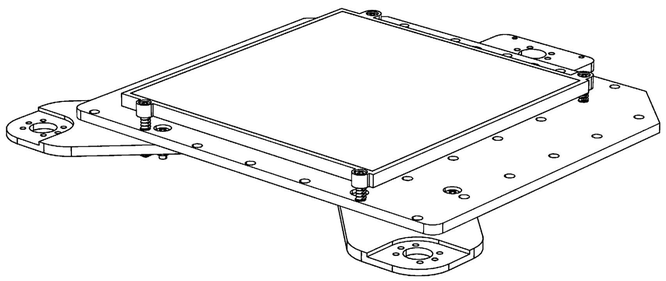

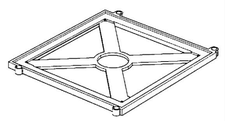	**HEATED BED SUPPORT**
	BUILD TIME: 8h
	PRINT SPEED: 60 mm/s
	MATERIAL: PLA
	SUPPORT: NO
	INFILL: 5%

SPONSORED BY Bundesministerium für Bildung und Forschung

LM16UU HOUSING & ROD ASSEMBLY

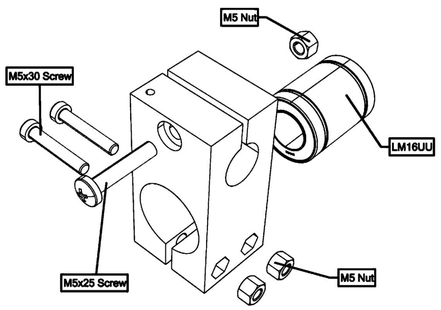

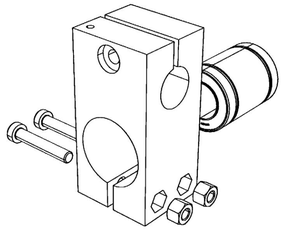

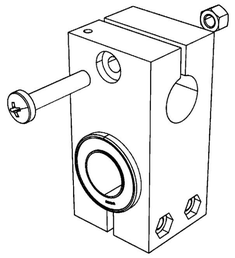

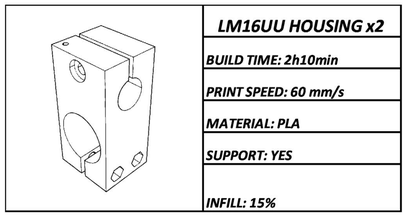

	LM16UU HOUSING x2
	BUILD TIME: 2h10min
	PRINT SPEED: 60 mm/s
	MATERIAL: PLA
	SUPPORT: YES
	INFILL: 15%

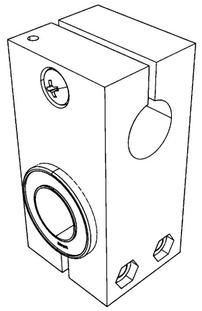

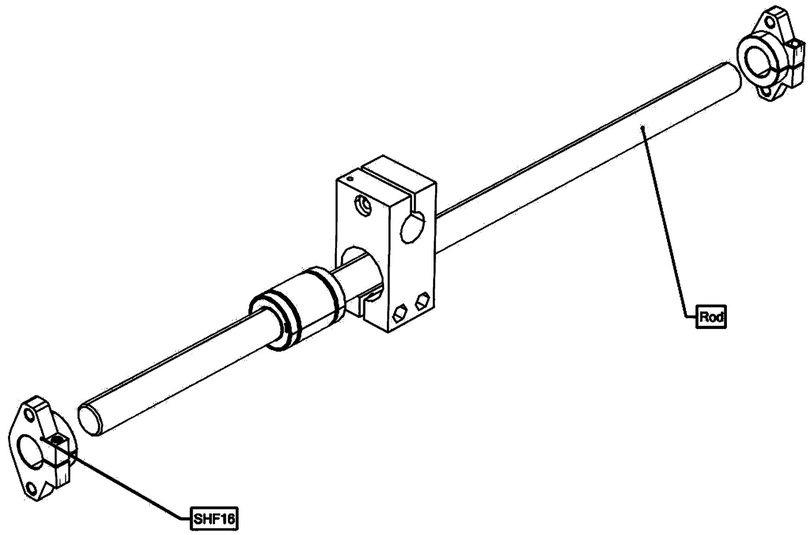

SFU 1204 ASSEMBLY

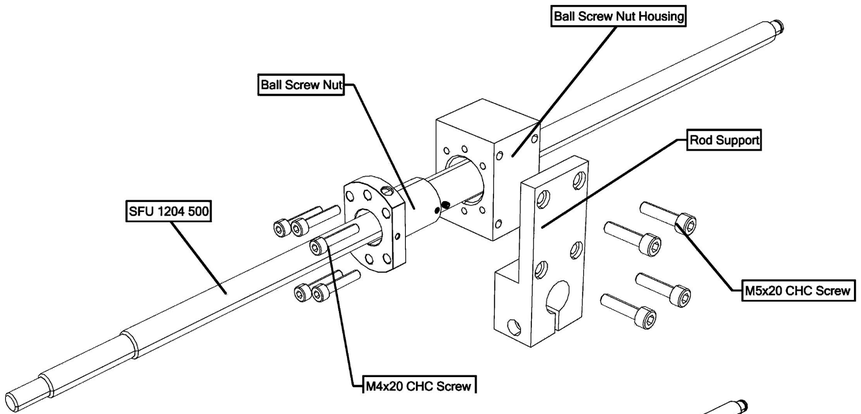

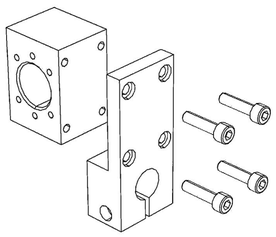

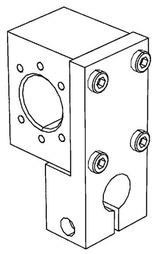

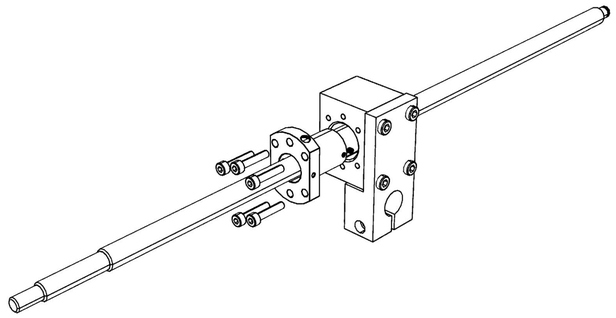

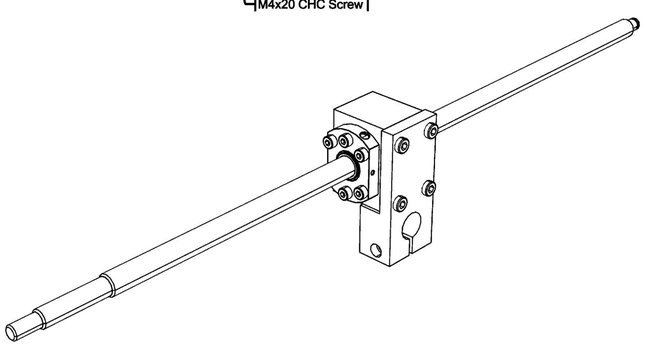

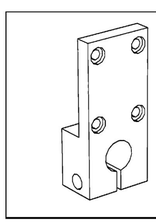

	ROD SUPPORT
	BUILD TIME: 1h28min
	PRINT SPEED: 60 mm/s
	MATERIAL: PLA
	SUPPORT: NO
	INFILL: 30%

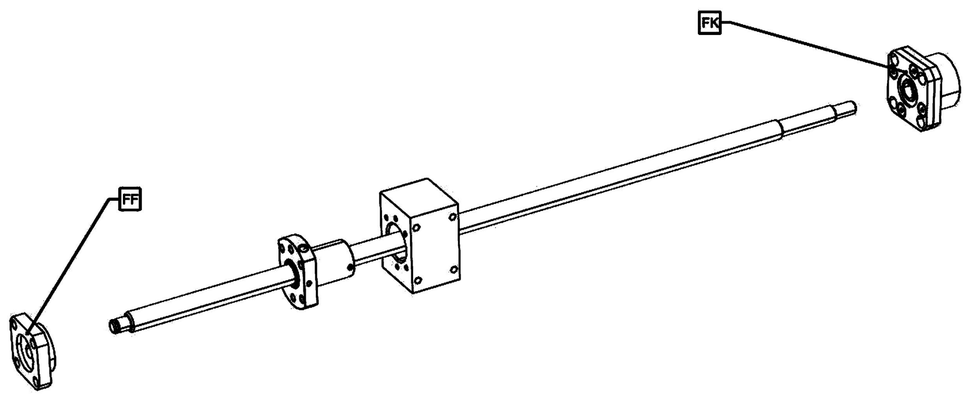

SPONSORED BY: Bundesministerium für Bildung und Forschung

ELECTRONIC BOX ASSEMBLY

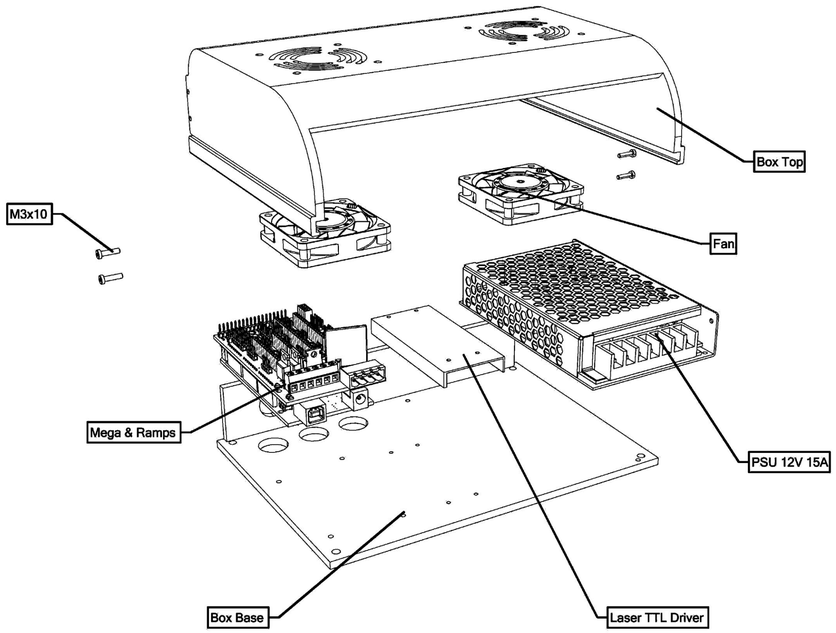

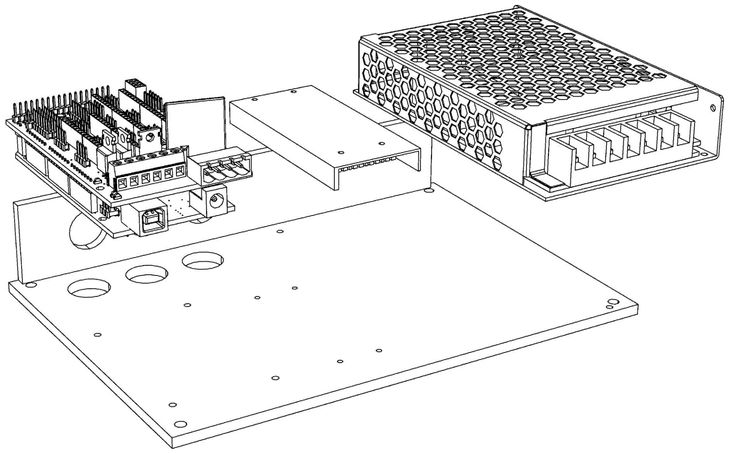

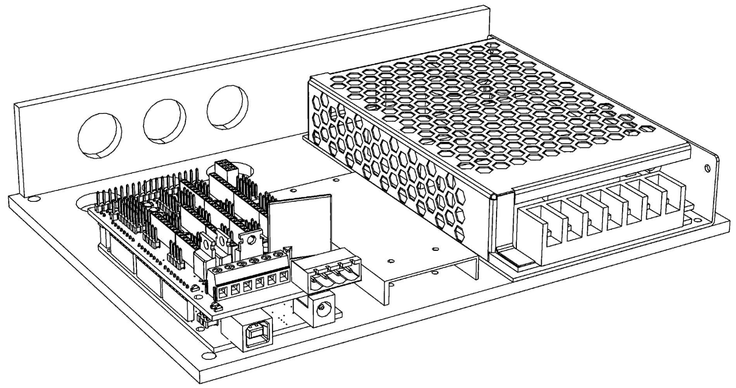

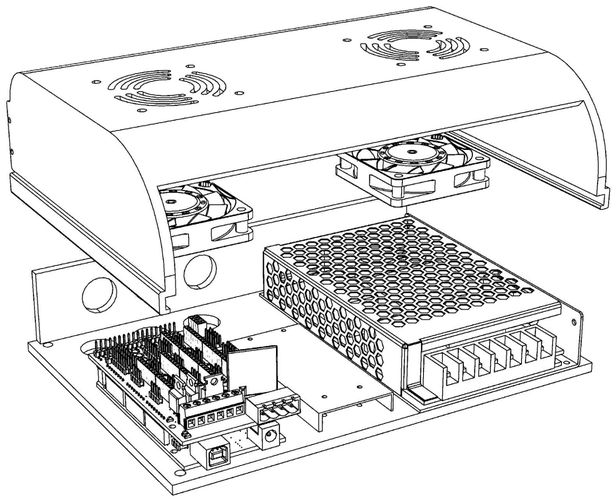

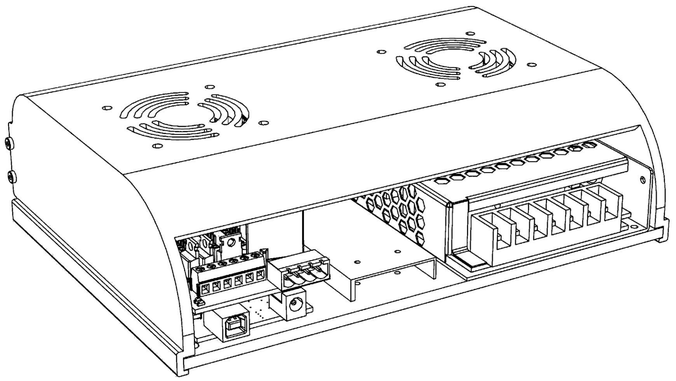

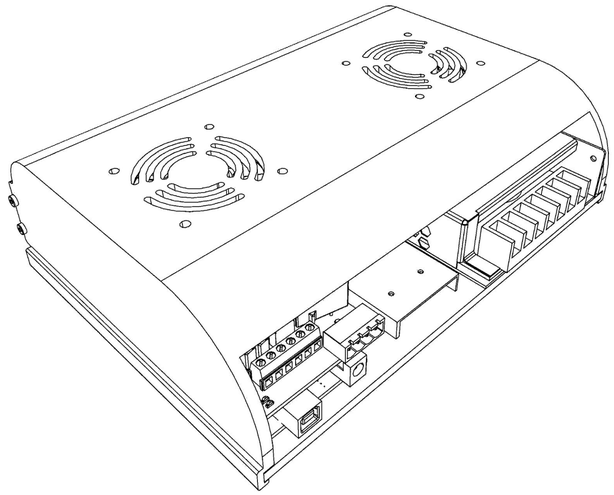

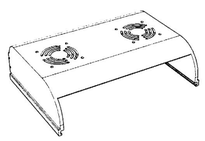

BOX TOP
BUILD TIME: 18h46min
PRINT SPEED: 60 mm/s
MATERIAL: PLA
SUPPORT: YES
INFILL: 15%

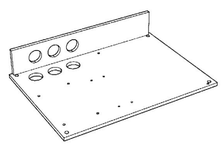

Box Base
BUILD TIME: 13h14min
PRINT SPEED: 60 mm/s
MATERIAL: PLA
SUPPORT: NO
INFILL: 15%

SPONSORED BY: Bundesministerium für Bildung und Forschung