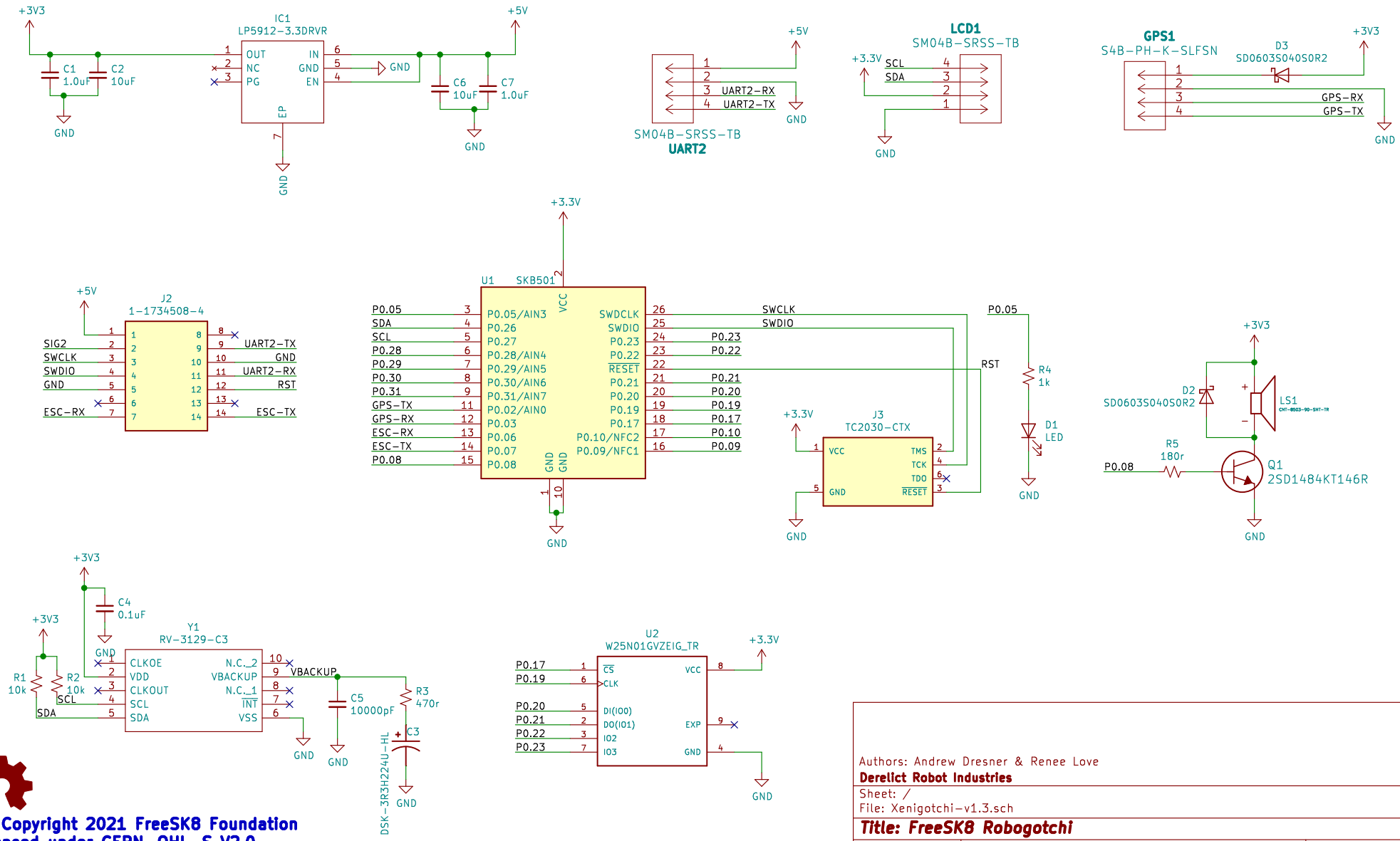

(c) Copyright 2021 FreeSK8 Foundation
Licensed under CERN-OHL-S V2.0
https://ohwr.org/cern_ohl_s_v2.txt

Authors: Andrew Dresner & Renee Love
Derelict Robot Industries

Sheet: /
File: Xenigotchi-v1.3.sch

Title: FreeSK8 Robogotchi

Size: A4	Date: 2021-07-27	**Rev: v1.3**
KiCad E.D.A. kicad (5.1.5)-3		Id: 1/1