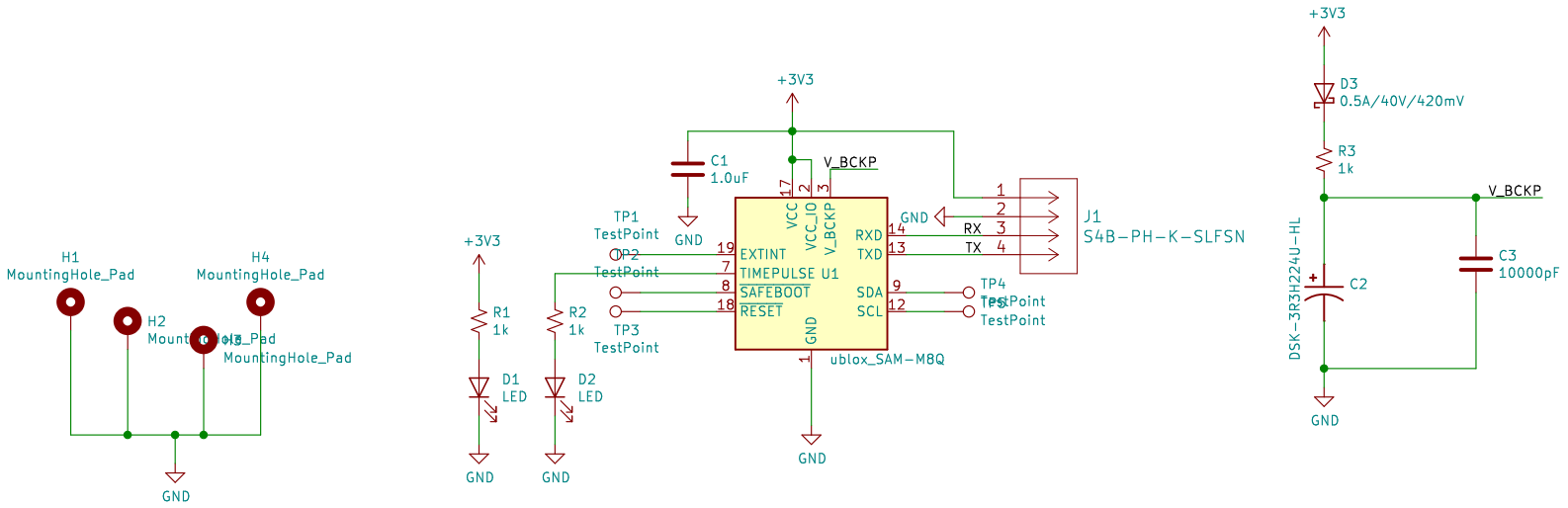

Authors: Andrew Dresner & Renee Love

Derelict Robot Industries

Sheet: /

File: GPS.sch

Title: FreeSK8 GPS Module

Size: A4	Date: 2020-11-01	**Rev: v1.1**
KiCad E.D.A. eeschema (5.1.5)-3		Id: 1/1