Marlin 2.0.x Firmware Changes

In Platformio.ini file change: default_envs = BIGTREE_GTR_V1_0

In Configuration.h file change:

```
#define SERIAL_PORT -1
#define SERIAL_PORT_2 3
#define MOTHERBOARD
  MOTHERBOARD BOARD_BTT_GTR_V1_0
```

Note: Serial Port definitions in Marlin 2.0.x for GTR V1.0 Board:
-1: USB Port; 3: TFT Port; 6: WIFI

0 - M1; MS1	0 - M0; MS0
1 - M2; MS2 OR	1 - M1; MS1
2 - M3; MS3	2 - M2; MS2

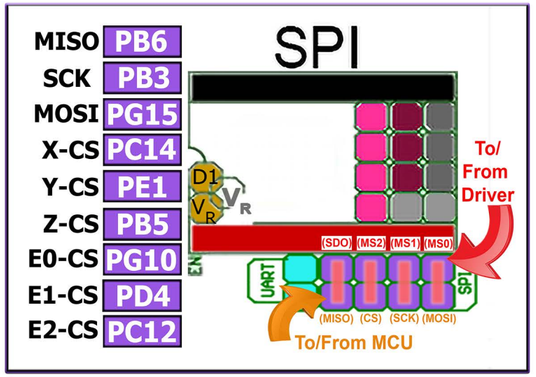

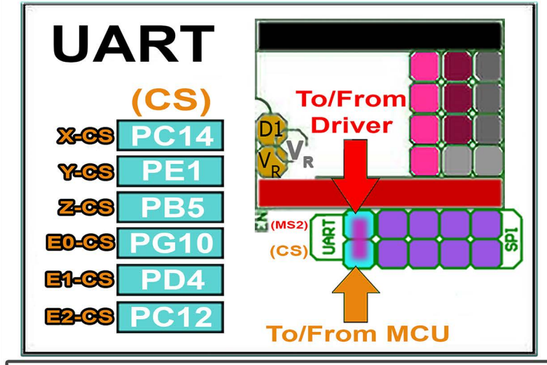

*1 THE CORRECTED PIN VALUE. THE CORRECT PIN VALUE CAME FROM BTT's GTR V1.0 SCHEMATIC DIAGRAM!

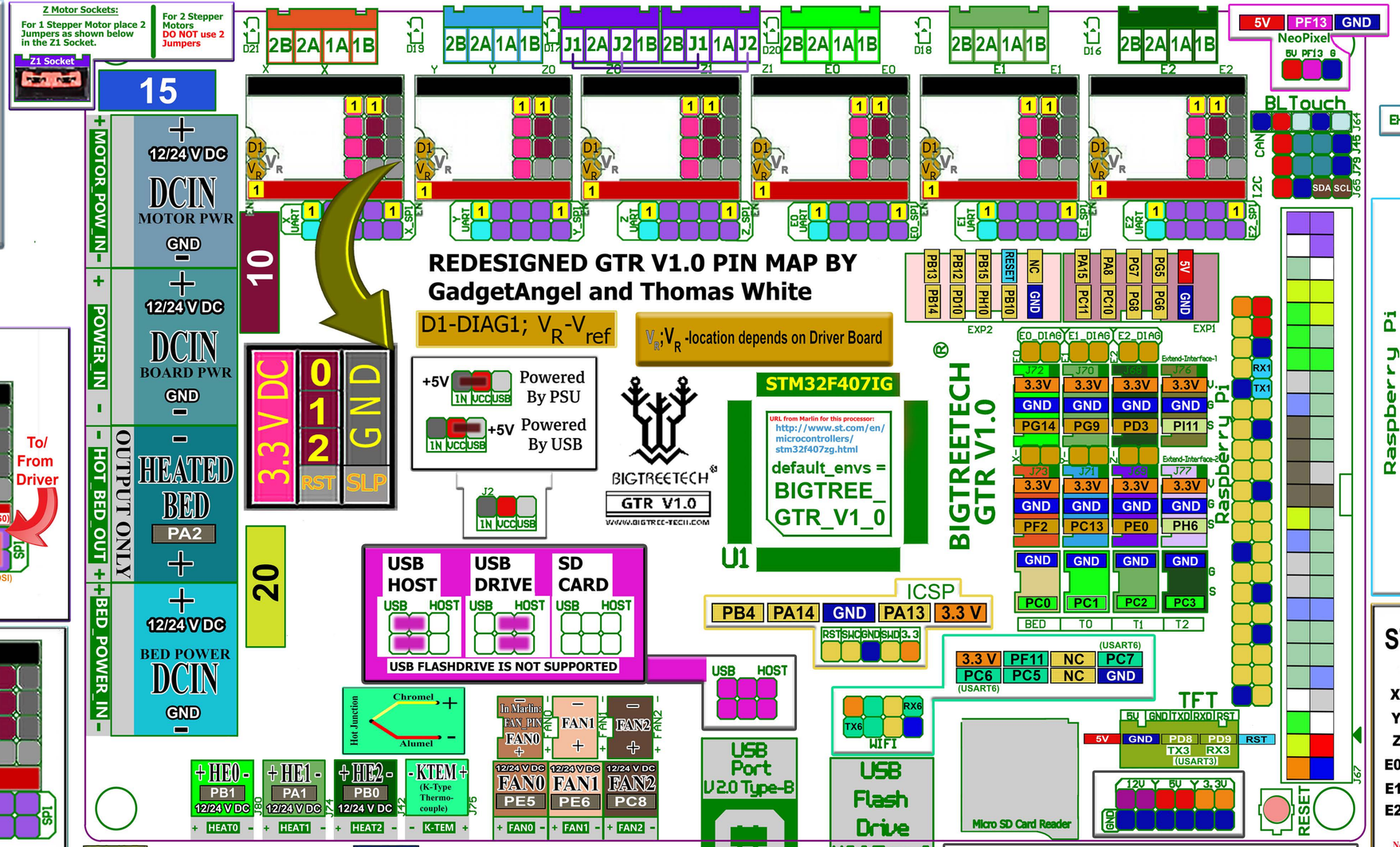

20 For the heated bed. 15 For stepper motor drivers.
10 For logic, fans, hotend heaters.

*2 WILL WORK WITH 3.3 OR 5V. A LOT OF PINS ARE 5V TOLERANT. ONLY TESTED I2C - CHECK DATASHEET AND SCHEMATIC!

	EN	STEP	DIR
X	PF1	PC15	PF0
Y	PE4	PE3	PE2
Z	PB9	PB8	PB7 *1
E0	PG13	PG12	PG11
E1	PD7	PD6	PD5
E2	PD2	PD1	PD0

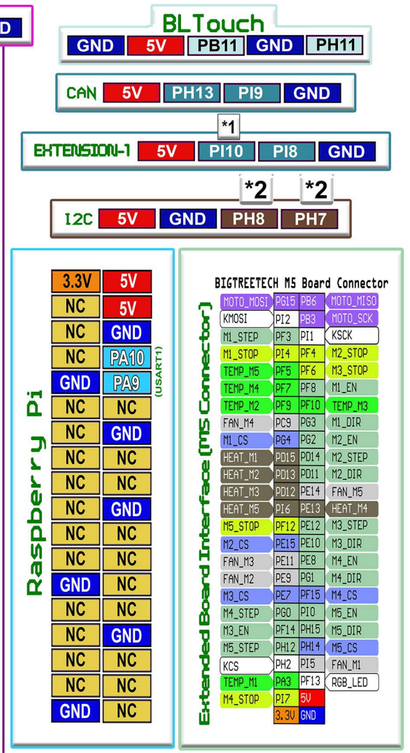

STALLGUARD

	DIAG PIN	ENDSTOP
X	X-DIAG1	PF2 X-
Y	Y-DIAG1	PC13 Y-
Z	Z-DIAG1	PE0 Z-
E0	E0-DIAG1	PG14 E0
E1	E1-DIAG1	PG9 E1
E2	E2-DIAG1	PD3 E2

ENABLED DISABLED

DIAG PINs are directly connected to the endstops on all boards. Therefore, the DIAG JUMPERS do nothing!!

Note Concerning the TMC2209 in UART Mode ONLY:
If using limit switches/enstops, ensure the DIAG pin is NOT plugged into the GTR 1.0 board (i.e., the DIAG pin must be cut off the driver board on the TMC2209). This note does not apply to the TMC2130, TMC5160 or TMC5161 in SPI mode.

Note: For TMC2209, TMC2130, TMC5160 and TMC5161 (any Driver Boad that supports sensor-less homing) if you install it on the extruder and you want to use a filament runout sensor, remove the DIAG/DIAG1/DIAG0 PIN to allow the filament runout sensor to work properly.