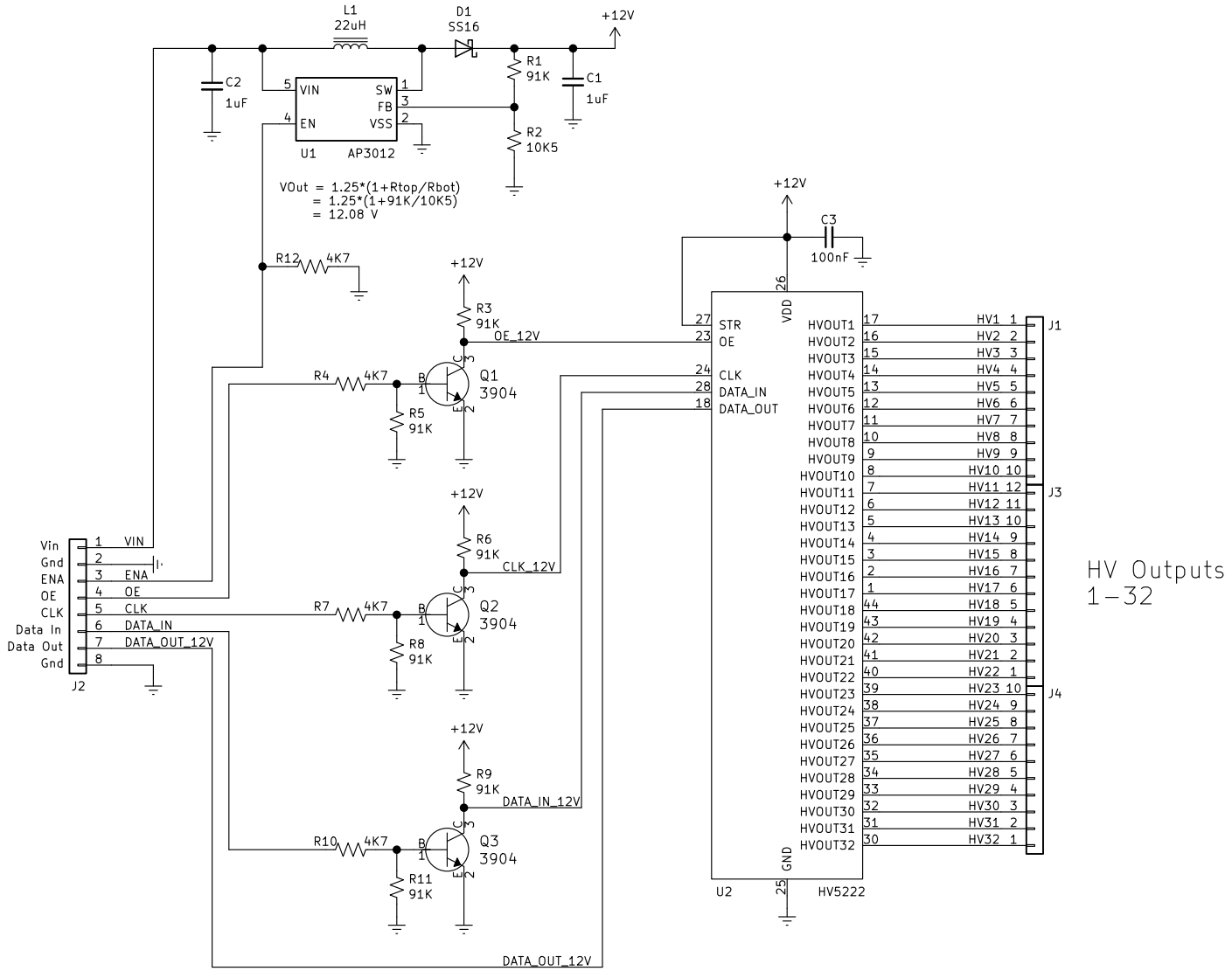


https://github.com/GadgetReboot/HV5222_Breakout
https://www.youtube.com/gadgetreboot
**Gadget Reboot**

Sheet: /
File: GR_Nixie_Driver.sch

***Title: HV5222 Breakout***

| | | |
|---|---|---|
| Size: A | Date: 2024-04-20 | **Rev: 1** |
| KiCad E.D.A. kicad (5.1.2-1)-1 | | Id: 1/1 |