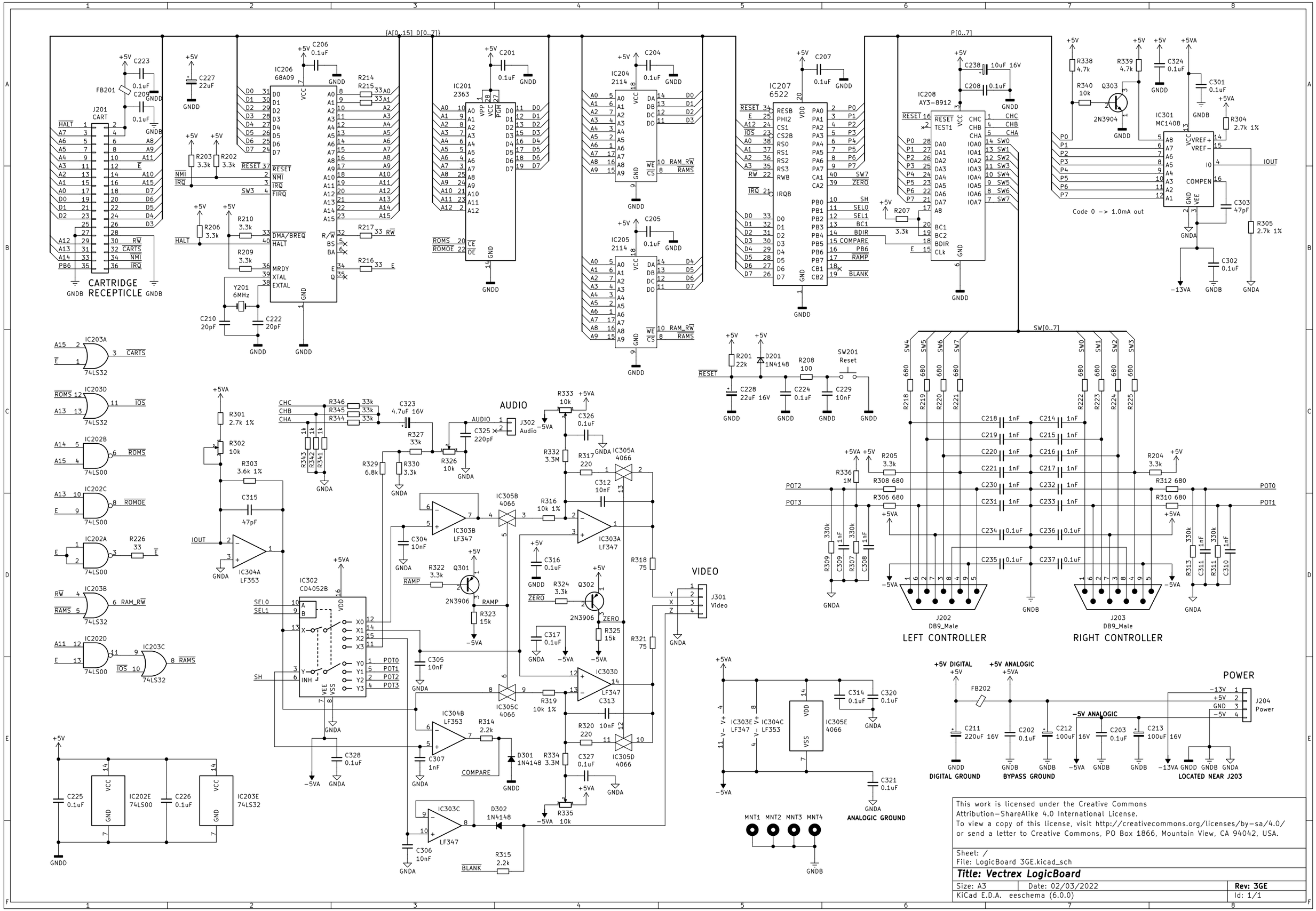

This work is licensed under the Creative Commons Attribution-ShareAlike 4.0 International License.
To view a copy of this license, visit http://creativecommons.org/licenses/by-sa/4.0/ or send a letter to Creative Commons, PO Box 1866, Mountain View, CA 94042, USA.

Sheet: /
File: LogicBoard 3GE.kicad_sch

Title: Vectrex LogicBoard

Size: A3	Date: 02/03/2022	Rev: 3GE
KiCad E.D.A. eeschema (6.0.0)		Id: 1/1