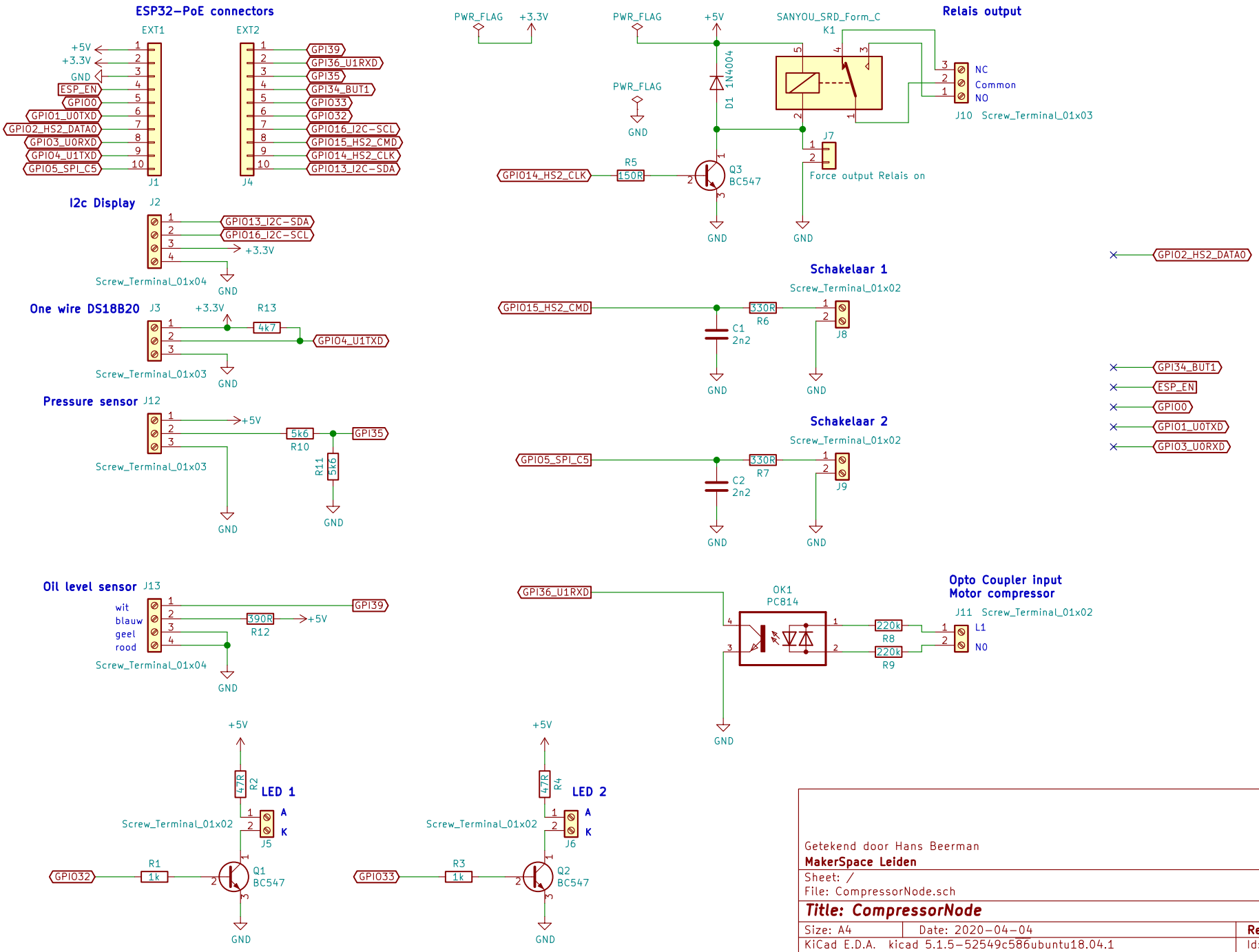

Getekend door Hans Beerman

MakerSpace Leiden

Sheet: /

File: CompressorNode.sch

Title: CompressorNode

Size: A4	Date: 2020-04-04	**Rev: V0.13 Concept**
KiCad E.D.A. kicad 5.1.5-52549c586ubuntu18.04.1		Id: 1/1