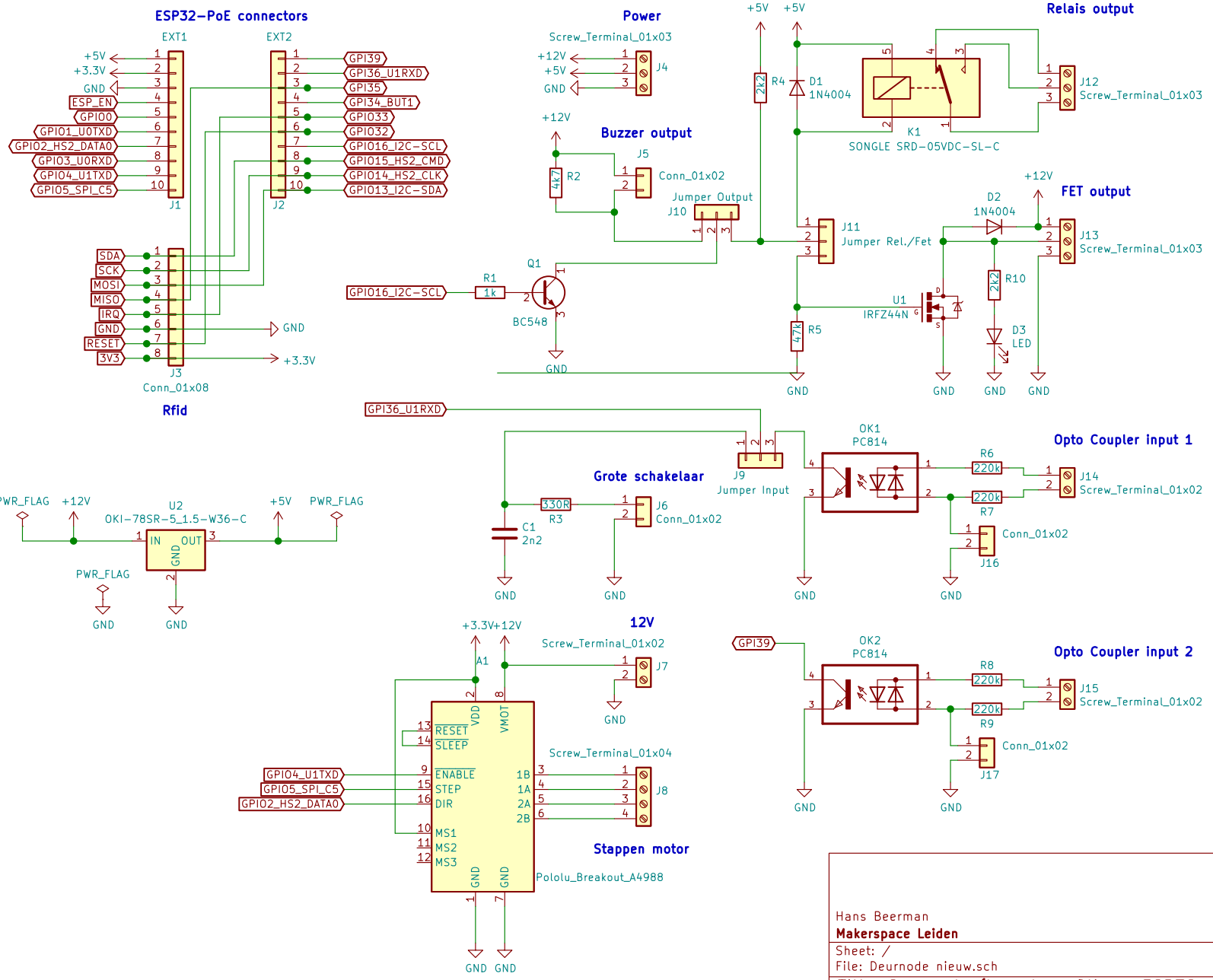

Hans Beerman
Makerspace Leiden
Sheet: /
File: Deurnode nieuw.sch

Title: Deurnode (based on Olimex ESP32-POE)

Size: A4	Date: 2020-03-02	**Rev: Version 0.3**
KiCad E.D.A. kicad 5.1.5-52549c584ubuntu18.04.1		Id: 1/1