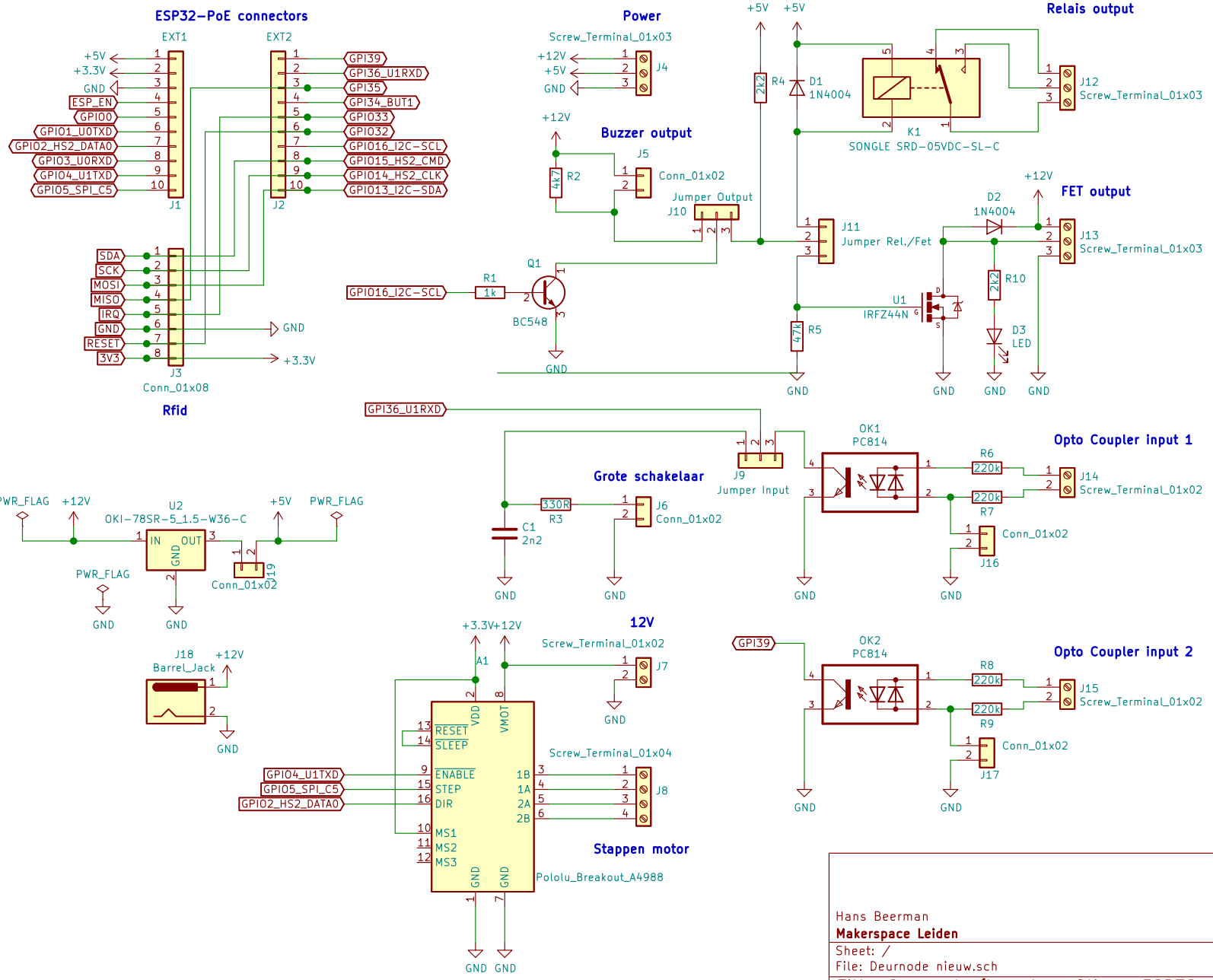


Hans Beerman
**Makerspace Leiden**

Sheet: /
File: Deurnode nieuw.sch

**Title: Deurnode (based on Olimex ESP32-POE)**

| | | |
|---|---|---|
| Size: A4 | Date: 2020-03-02 | Rev: Version 0.3 |
| KiCad E.D.A. kicad 5.1.5-52549c584ubuntu18.04.1 | | Id: 1/1 |