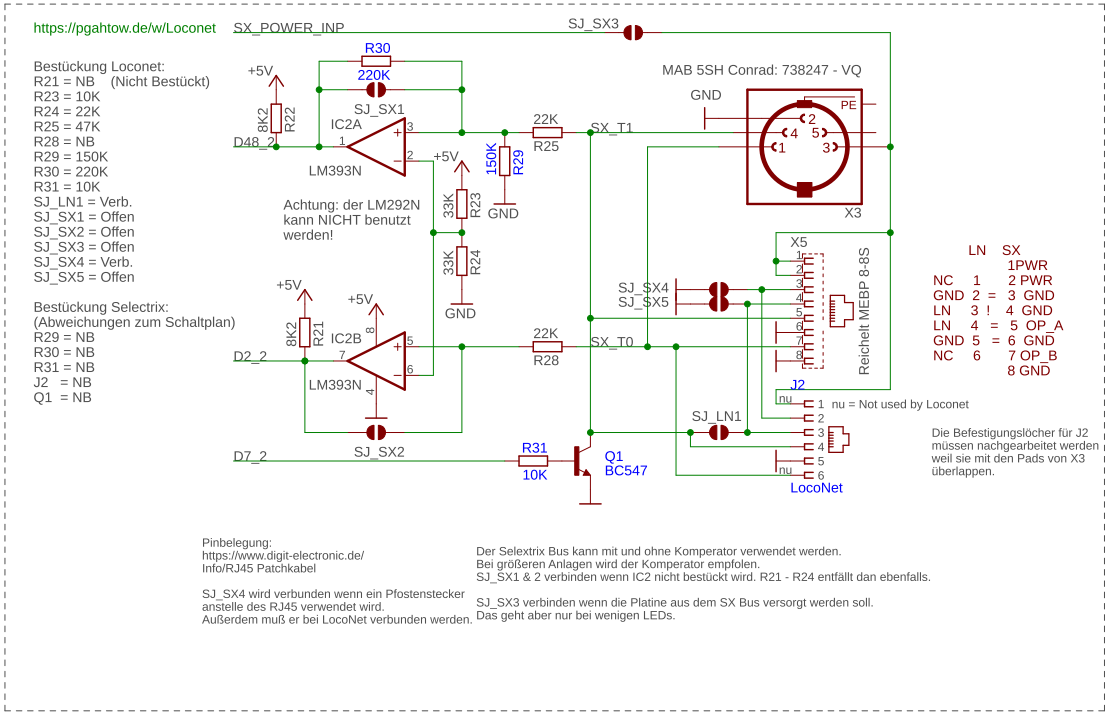


Revision History:
31.08.20: - Corrected the LED PCBs (Ver. 1.5 was totaly wrong)
- swaped the Input/Output pins (3-Pin header = Input)
- corrected the pin assignement of the 3535 WS2812
18.10.20: - Corrected the output of the last connector
31.10.22: - New size of te LED modules
- Additional normaly colosed Solder Jumper
05.11.22: - Moved the Selectrix part to this sheet
- Added Loconet components

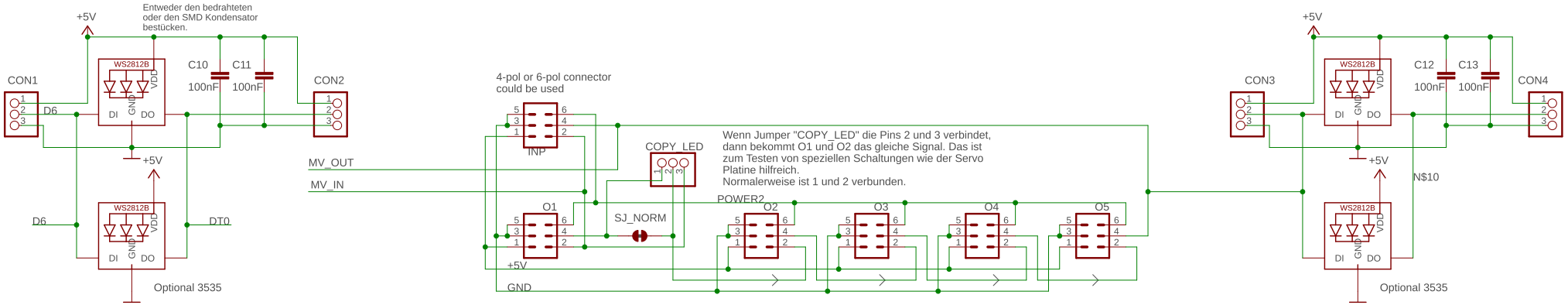


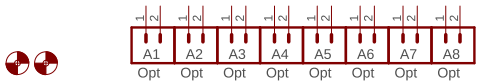


# LED Platinen und mini Verteiler mit Duplikate Funktion.

Arduino_fuer_LEDs_DCC_1.8

07.11.2022 20:57

Sheet: 2/2