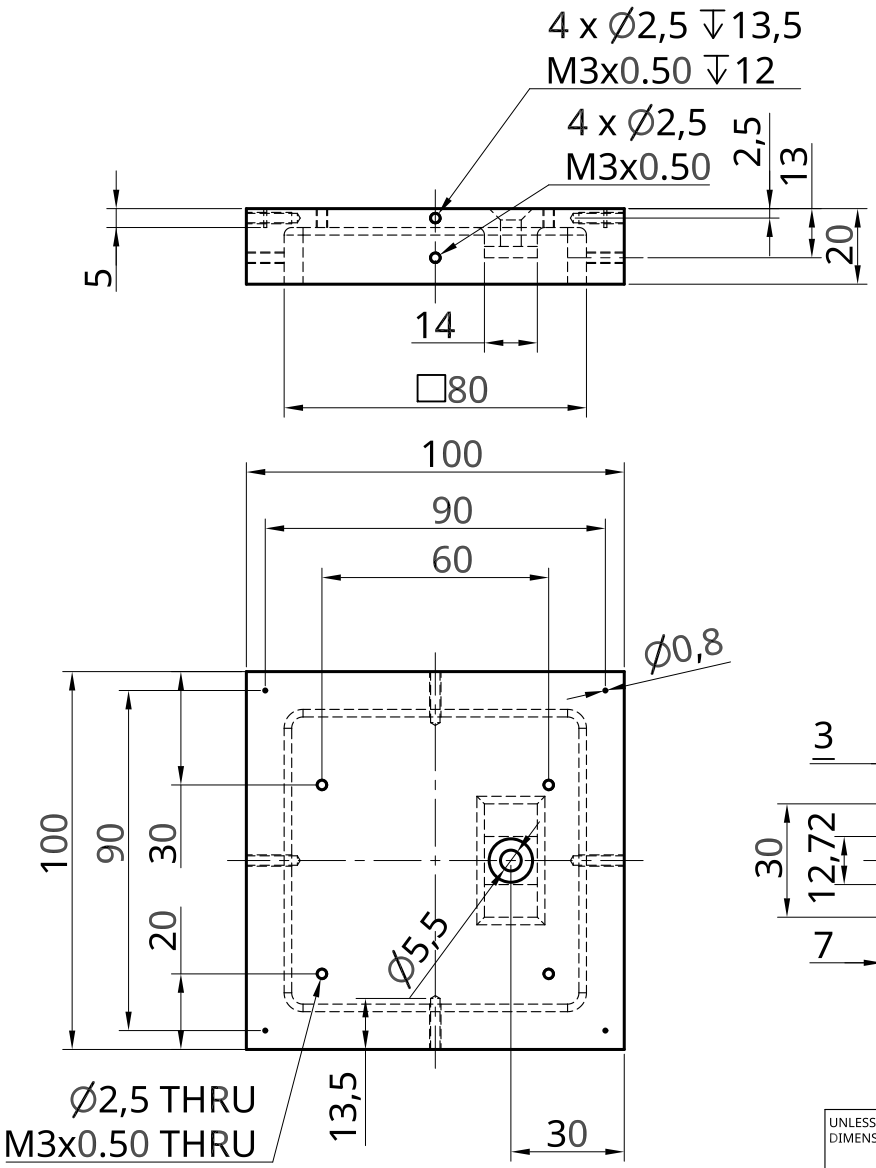

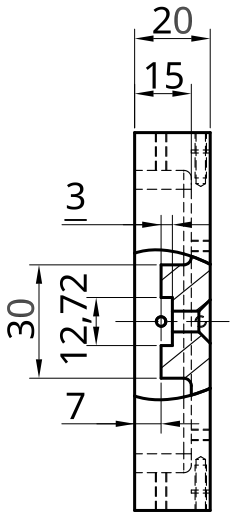

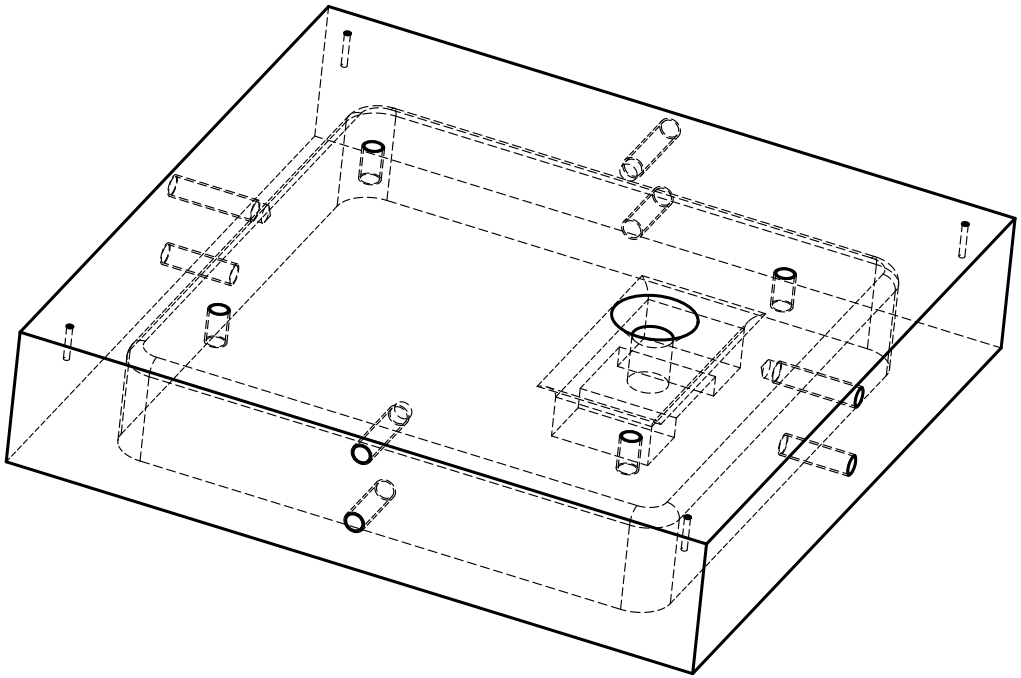

1:1

UNLESS OTHERWISE SPECIFIED, DIMENSIONS ARE IN MILLIMETERS ANGULAR = ± ° SURFACE FINISH √		NAME	SIGNATURE	DATE
	DRAWN	MARTIN FROEHLICH		2019-09-30
	CHECKED			
	APPROVED			
DO NOT SCALE DRAWING				
BREAK ALL SHARP EDGES AND REMOVE BURRS				
FIRST ANGLE PROJECTION	MATERIAL		FINISH	

TITLE

PressureBase

TouchBox Mk03

SIZE	DWG NO.	REV.
A4		1

SCALE	WEIGHT	SHEET
1:2		1 of 1