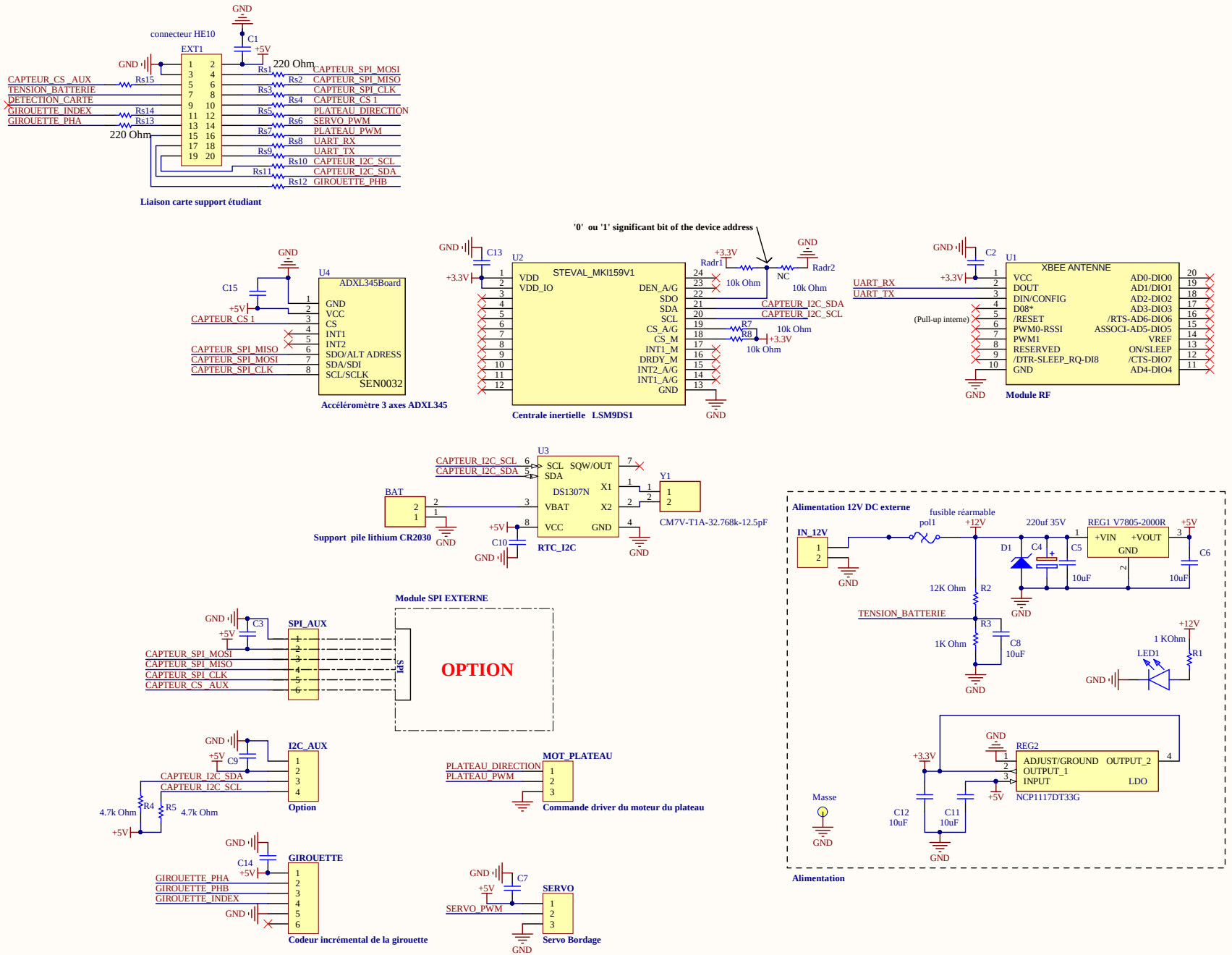

Title	**Interface-voilier V2.0**	
Size A3	Number	Revision
Date: 09/07/2021	Sheet of	
File: D:\Altium\..\Interface_voilier.SchDoc	Drawn By:	