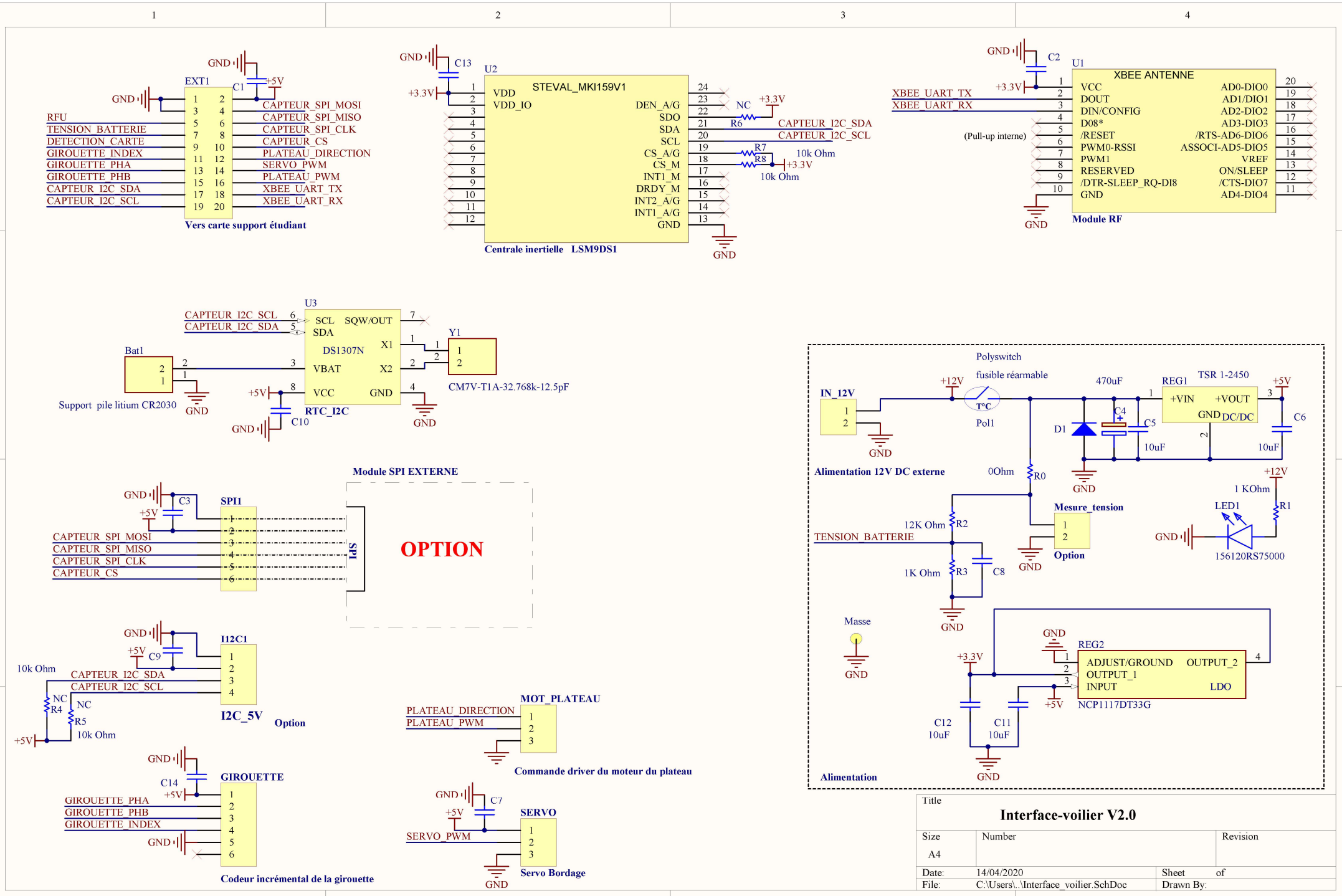
EXT1
C1
GND
+5V
RFU
TENSION_BATTERIE
DETECTION_CARTE
GIROUETTE_INDEX
GIROUETTE_PHA
GIROUETTE_PHB
CAPTEUR_I2C_SDA
CAPTEUR_I2C_SCL
CAPTEUR_SPI_MOSI
CAPTEUR_SPI_MISO
CAPTEUR_SPI_CLK
CAPTEUR_CS
PLATEAU_DIRECTION
SERVO_PWM
PLATEAU_PWM
XBEE_UART_TX
XBEE_UART_RX
Vers carte support étudiant
C13
U2
STEVAL_MKI159V1
VDD
VDD_IO
DEN_A/G
SDO
SDA
SCL
CS_A/G
CS_M
INT1_M
DRDY_M
INT2_A/G
INT1_A/G
GND
+3.3V
NC
R6
R7
R8
10k Ohm
Centrale inertielle LSM9DS1
C2
U1
XBEE ANTENNE
VCC
DOUT
DIN/CONFIG
D08*
/RESET
PWM0-RSSI
PWM1
RESERVED
/DTR-SLEEP_RQ-DI8
AD0-DIO0
AD1/DIO1
AD2-DIO2
AD3-DIO3
/RTS-AD6-DIO6
ASSOCI-AD5-DIO5
VREF
ON/SLEEP
/CTS-DIO7
AD4-DIO4
(Pull-up interne)
Module RF
U3
SCL
SDA
SQW/OUT
DS1307N
X1
X2
VBAT
VCC
RTC_I2C
Bat1
Support pile litium CR2030
C10
Y1
CM7V-T1A-32.768k-12.5pF
Module SPI EXTERNE
SPI1
C3
OPTION
I12C1
C9
I2C_5V
Option
R4
R5
GIROUETTE
C14
Codeur incrémental de la girouette
MOT_PLATEAU
Commande driver du moteur du plateau
C7
SERVO
Servo Bordage
Polyswitch
fusible réarmable
Pol1
IN_12V
Alimentation 12V DC externe
470uF
REG1
TSR 1-2450
+VIN
+VOUT
DC/DC
C4
C5
C6
D1
10uF
0Ohm
R0
Mesure_tension
Option
12K Ohm
R2
1K Ohm
R3
C8
1 KOhm
R1
LED1
156120RS75000
Masse
REG2
ADJUST/GROUND
OUTPUT_1
INPUT
OUTPUT_2
LDO
NCP1117DT33G
C12
C11
Alimentation
Title
Interface-voilier V2.0
Size
A4
Number
Revision
Date: 14/04/2020
Sheet of
File: C:\Users\..\Interface_voilier.SchDoc
Drawn By: