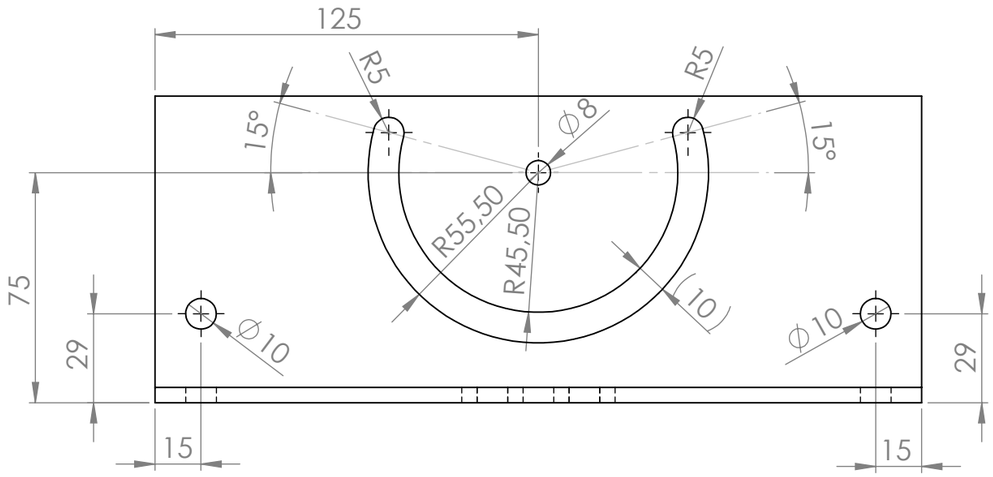

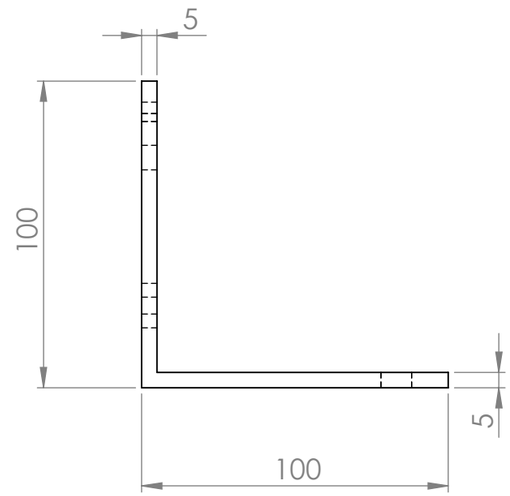

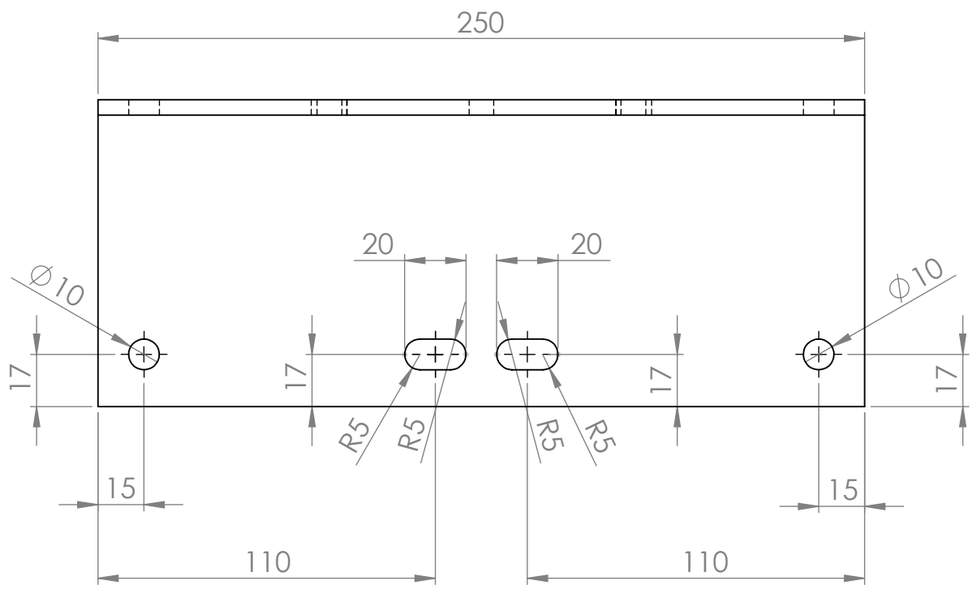

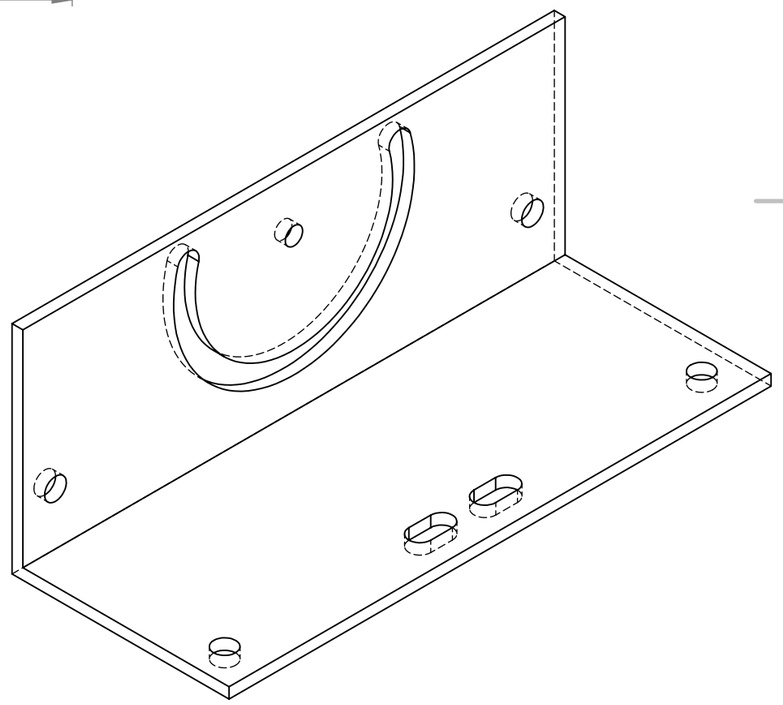

UNLESS OTHERWISE SPECIFIED: DIMENSIONS ARE IN MILLIMETERS SURFACE FINISH: TOLERANCES: LINEAR: ANGULAR:	FINISH:			DEBURR AND BREAK SHARP EDGES	DO NOT SCALE DRAWING	REVISION
	NAME	SIGNATURE	DATE			
DRAWN						
CHK'D						
APPV'D					DWG NO	L profile 100x100x5
MFG						
Q.A				MATERIAL:	TITLE:	A3
				WEIGHT:	SCALE:1:2	SHEET 1 OF 1