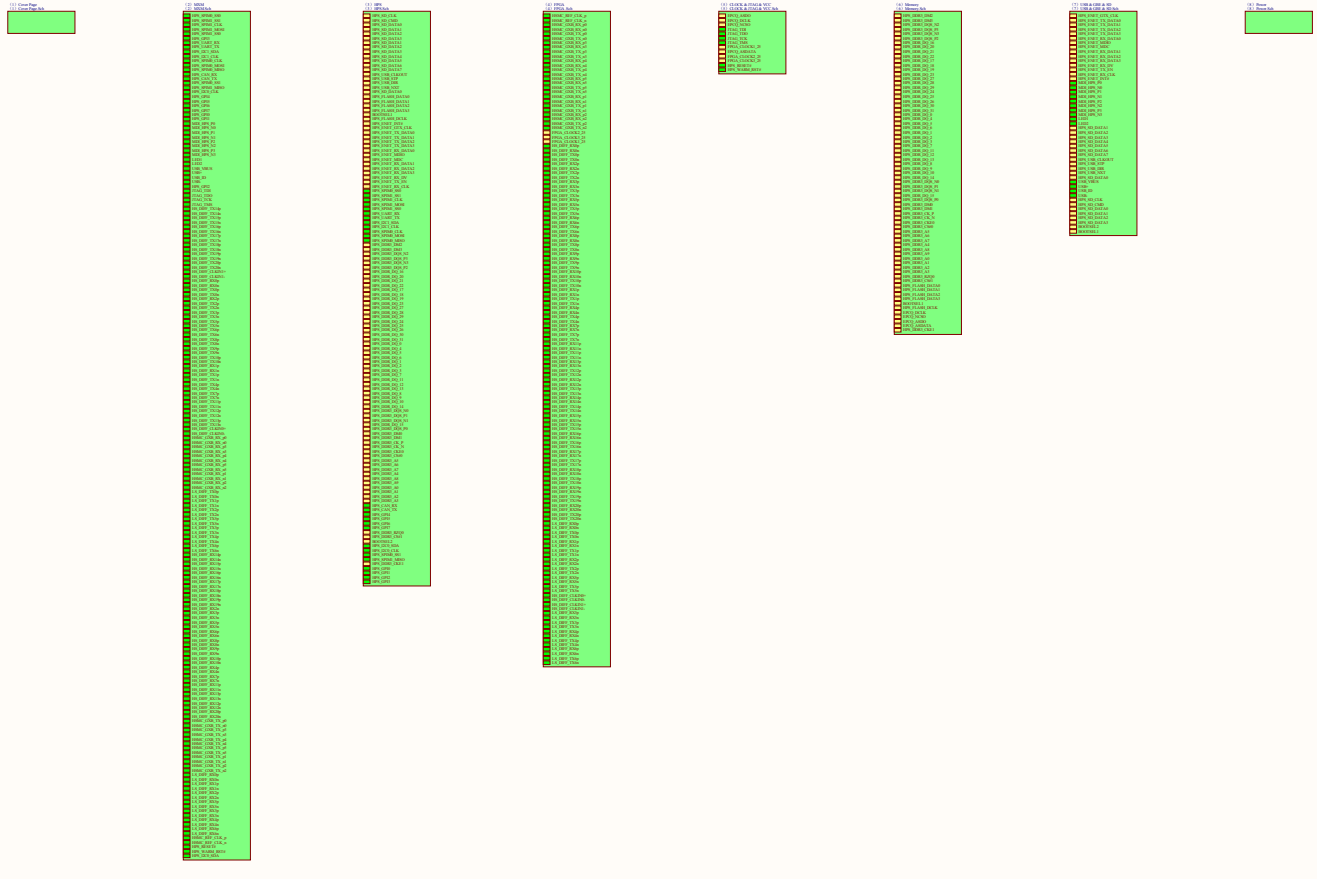

Title		
Size	Number	Revision
Date		
Sheet	Sheet Name	Sheet Number
Date	Date	Sheet Number
Filename	Filename	Filename

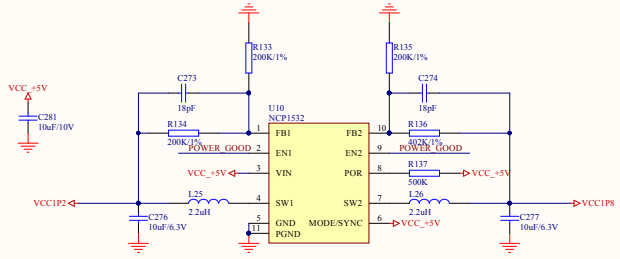

VCC1P2 1.2V / 1A **VCC1P8 1.8V / 0.1A**

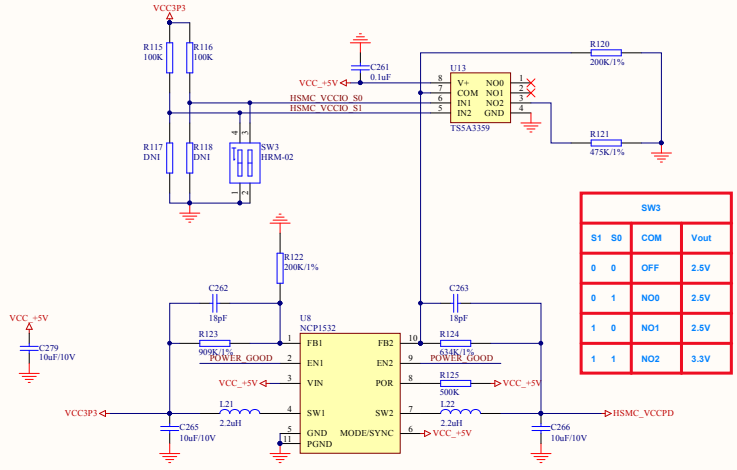

VCC3P3 3.3V / 1A **HSMC_VCCPD / 0.5A**

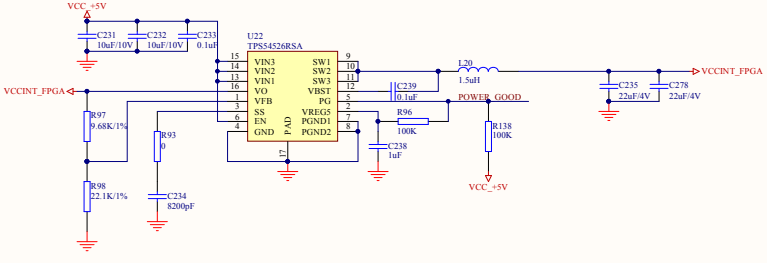

1.1V / 5.5A

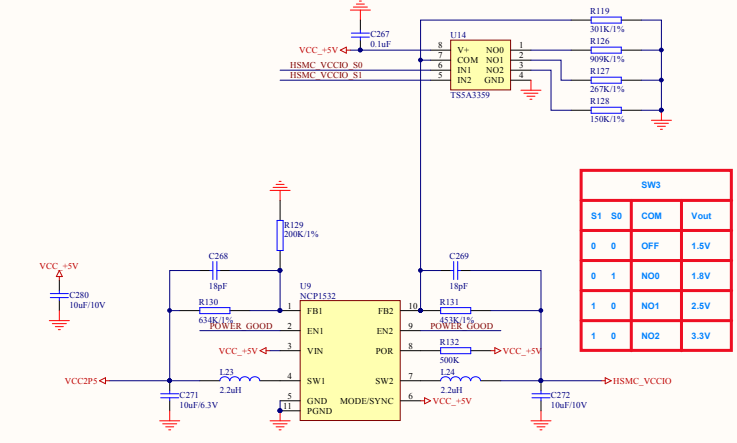

VCC2P5 2.5V / 1A **HSMC_VCCIO / 0.5A**

Title		
Size: C	Number	Revision
Date: 7/14/2014	Sheet of	
File: F:\CV23 V1.0\原理图\（8）Power.Sch	Drawn By:	

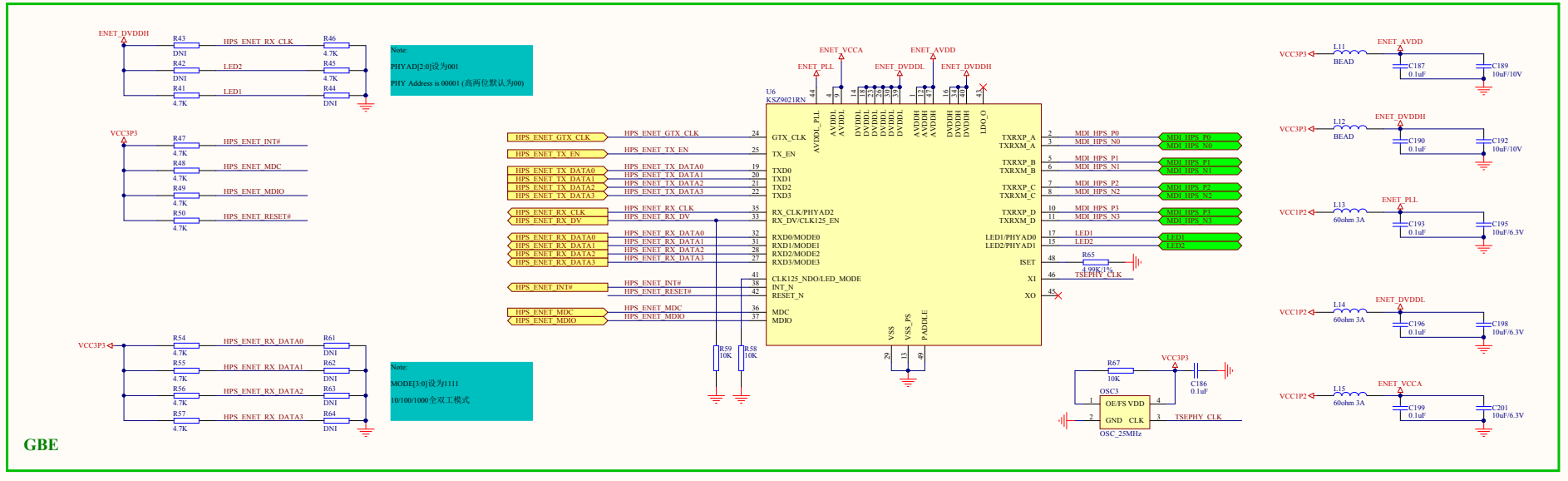

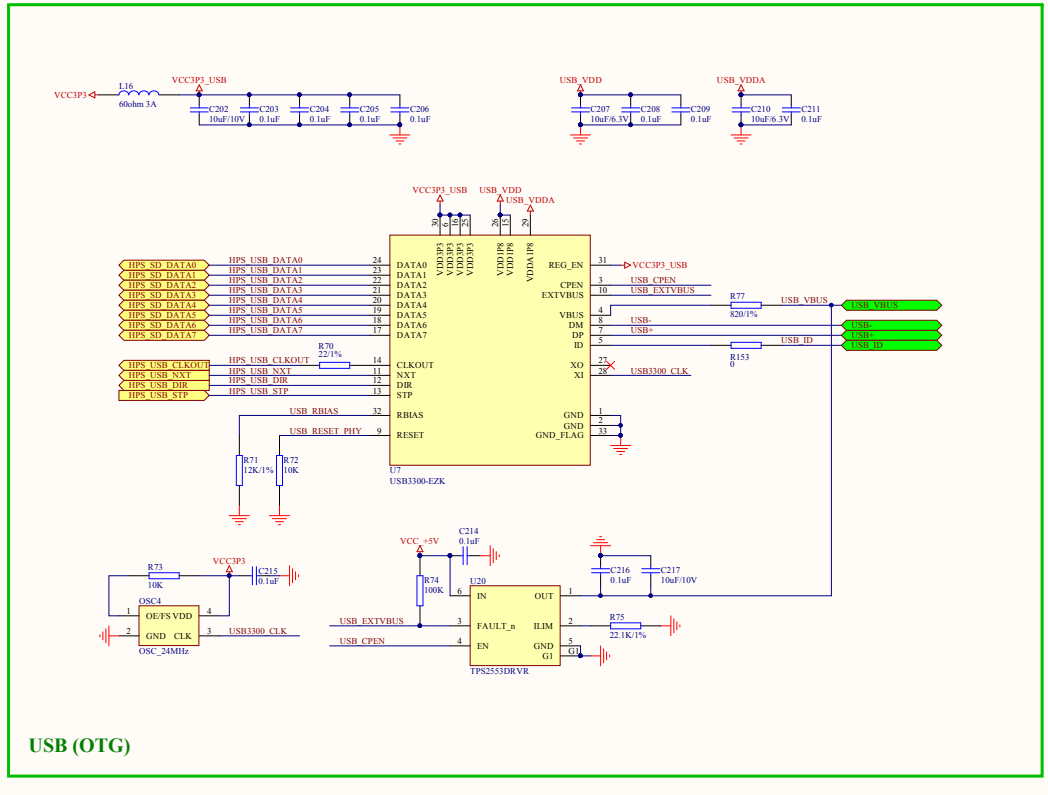

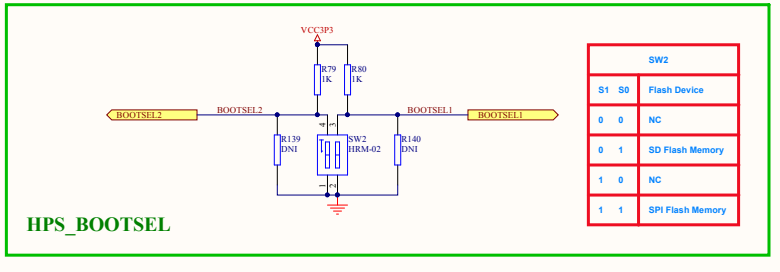

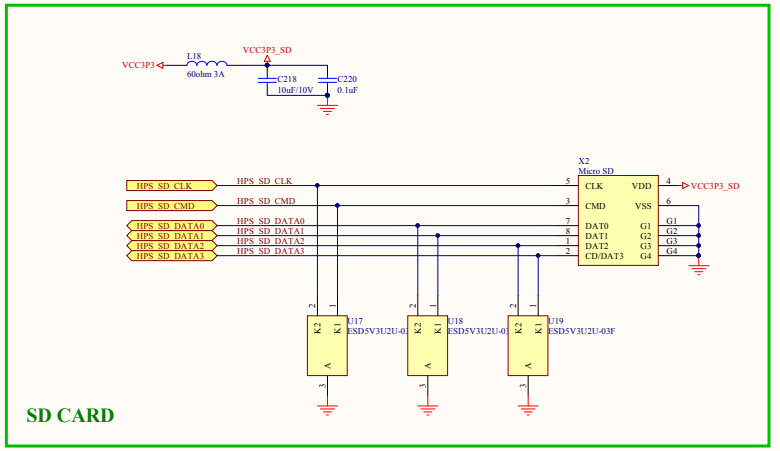

Title		
Size: C	Number	Revision
Date: 7/14/2014	Sheet of	
File: F:\CV23 V1.0原理图\（7）USB & GBE.SchDoc	Drawn By:	

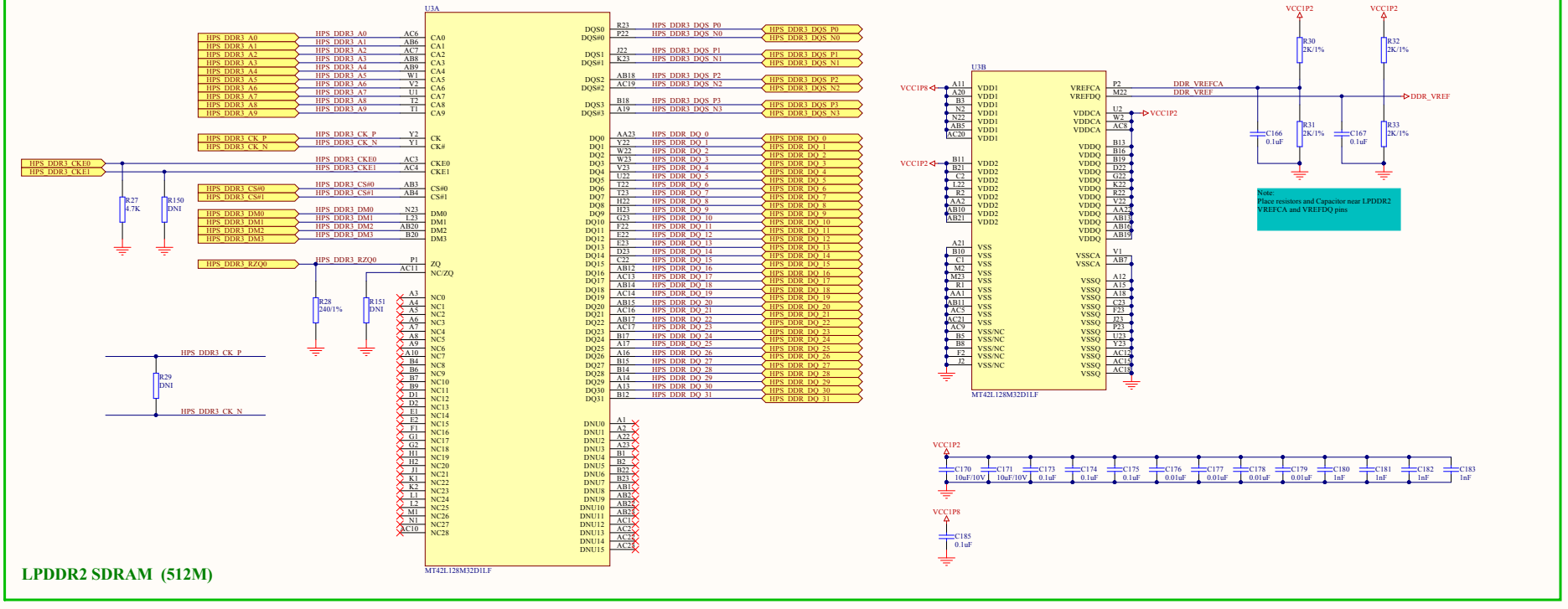

LPDDR2 SDRAM (512M)

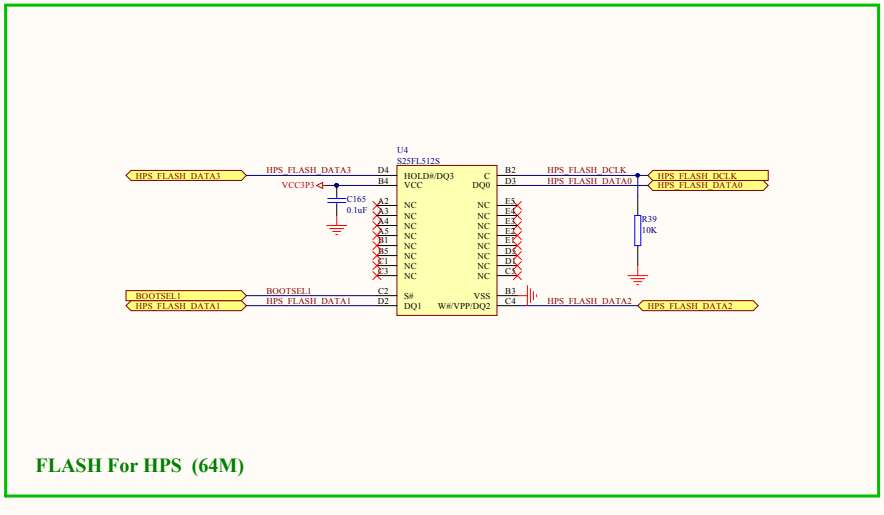

FLASH For HPS (64M)

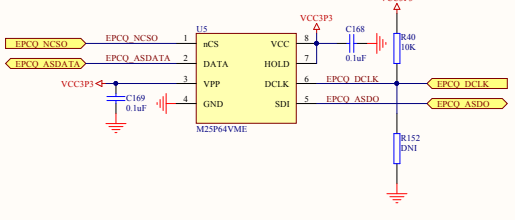

FLASH For FPGA (8M)

Title			
Size: C	Number		Revision
Date: 7/14/2014		Sheet of	
File: F:\CV23 V1.0\原理图\（6）Memory.Sch		Drawn By:	

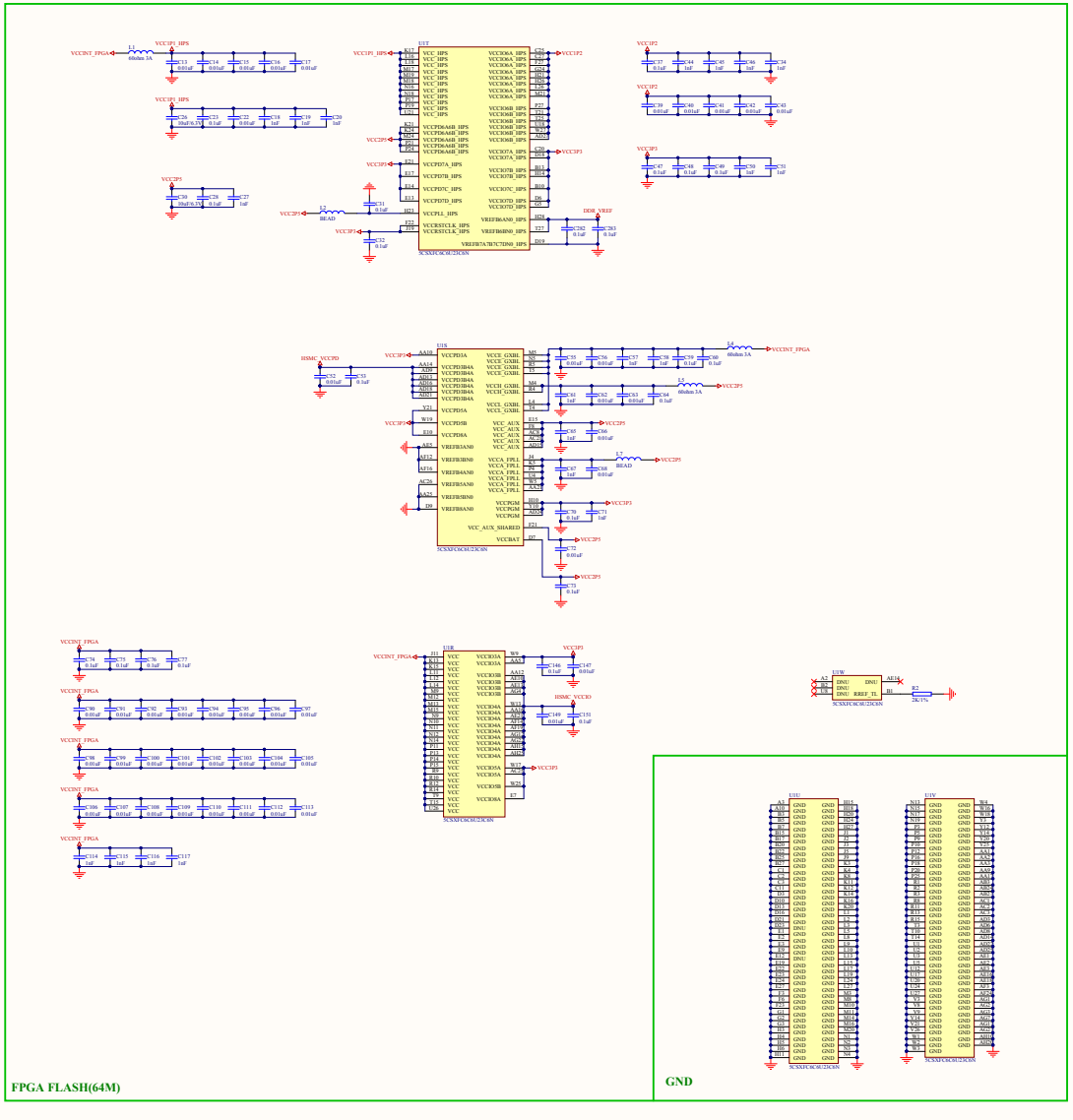

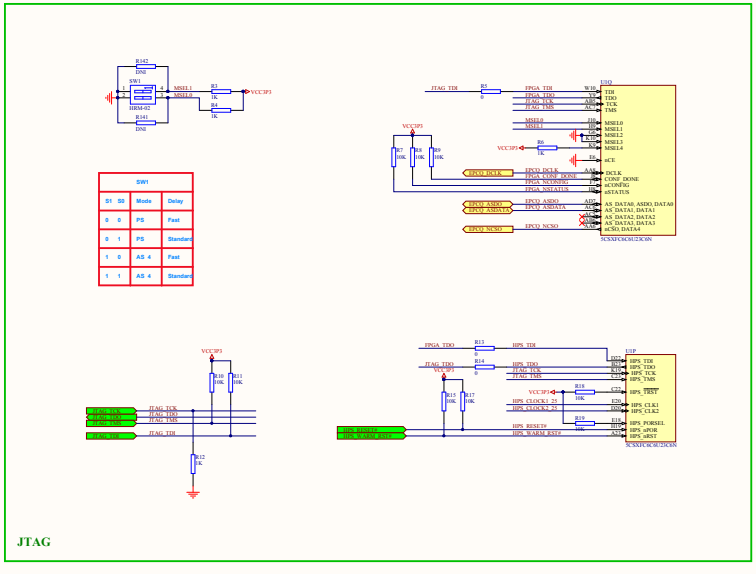

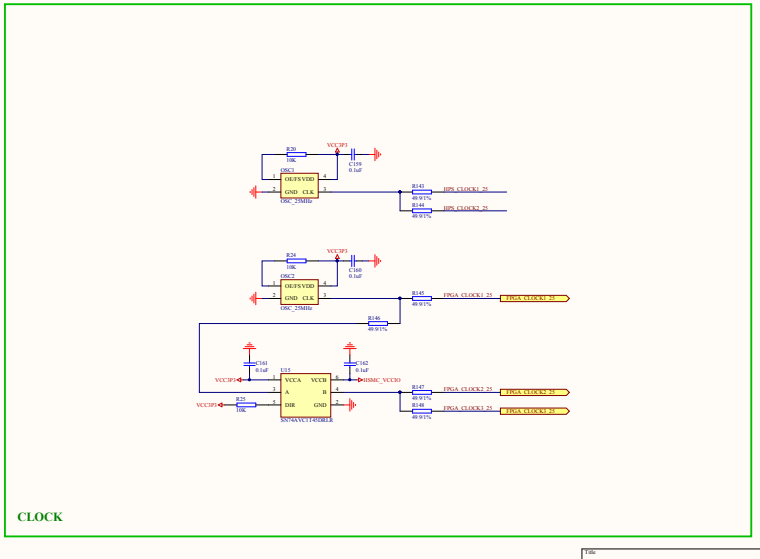

SW1			
S1	S0	Mode	Delay
0	0	PS	Fast
0	1	PS	Standard
1	0	AS 4	Fast
1	1	AS 4	Standard

Title			
Size D	Number		Revision
Date: 7/14/2014		Sheet of	
File: F:\CV\FLV1.0 - 1.5\1.CLOCK & JTAG			Drawn By:

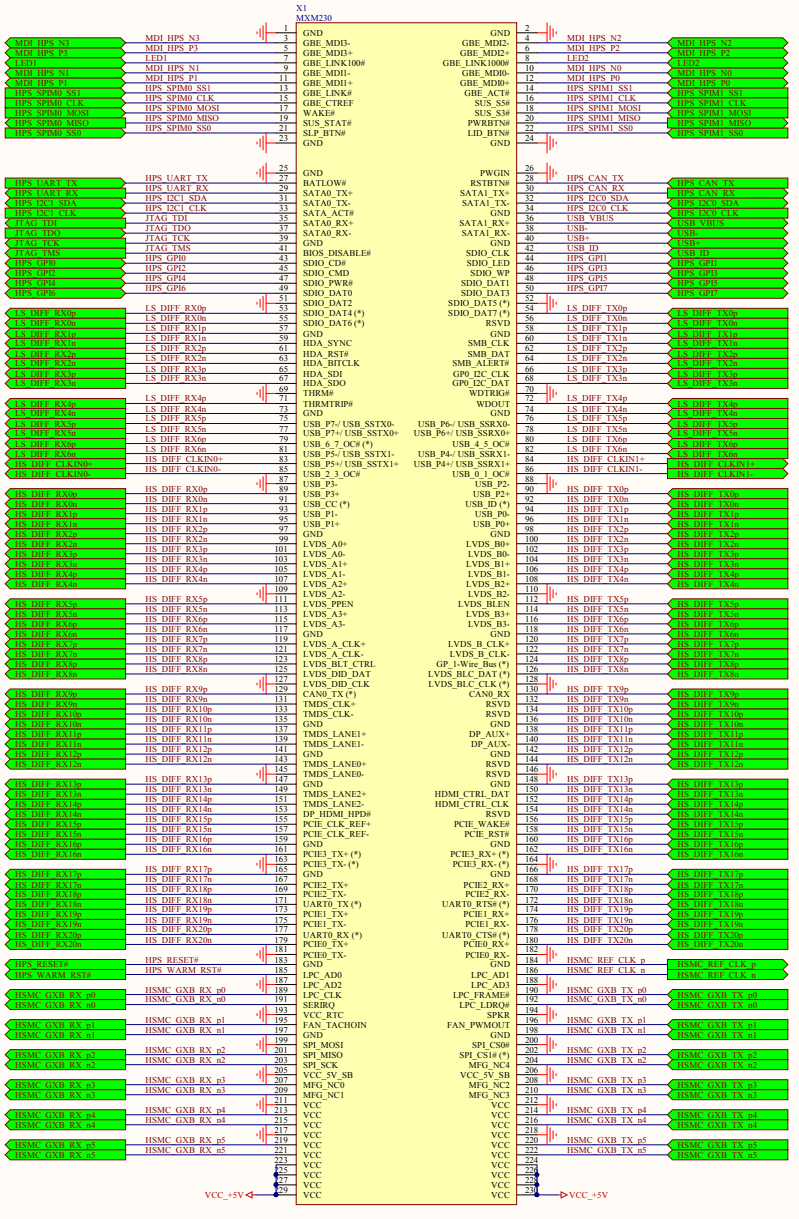
X1
MXM230
GND
GBE_MDI3-
GBE_MDI3+
GBE_LINK100#
GBE_MDI1-
GBE_MDI1+
GBE_LINK#
GBE_CTREF
WAKE#
SUS_STAT#
SLP_BTN#
GND
GND
BATLOW#
SATA0_TX+
SATA0_TX-
SATA_ACT#
SATA0_RX+
SATA0_RX-
GND
BIOS_DISABLE#
SDIO_CD#
SDIO_CMD
SDIO_PWR#
SDIO_DAT0
SDIO_DAT2
SDIO_DAT4 (*)
SDIO_DAT6 (*)
GND
HDA_SYNC
HDA_RST#
HDA_BITCLK
HDA_SDI
HDA_SDO
THRM#
THRMTRIP#
GND
USB_P7-/ USB_SSTX0-
USB_P7+/ USB_SSTX0+
USB_6_7_OC# (*)
USB_P5-/ USB_SSTX1-
USB_P5+/ USB_SSTX1+
USB_2_3_OC#
USB_P3-
USB_P3+
USB_CC (*)
USB_P1-
USB_P1+
GND
LVDS_A0+
LVDS_A0-
LVDS_A1+
LVDS_A1-
LVDS_A2+
LVDS_A2-
LVDS_PPEN
LVDS_A3+
LVDS_A3-
GND
LVDS_A_CLK+
LVDS_A_CLK-
LVDS_BLT_CTRL
LVDS_DID_DAT
LVDS_DID_CLK
CAN0_TX (*)
TMDS_CLK+
TMDS_CLK-
GND
TMDS_LANE1+
TMDS_LANE1-
GND
TMDS_LANE0+
TMDS_LANE0-
GND
TMDS_LANE2+
TMDS_LANE2-
DP_HDMI_HPD#
PCIE_CLK_REF+
PCIE_CLK_REF-
GND
PCIE3_TX+ (*)
PCIE3_TX- (*)
GND
PCIE2_TX+
PCIE2_TX-
UART0_TX (*)
PCIE1_TX+
PCIE1_TX-
UART0_RX (*)
PCIE0_TX+
PCIE0_TX-
GND
LPC_AD0
LPC_AD2
LPC_CLK
SERIRQ
VCC_RTC
FAN_TACHOIN
GND
SPI_MOSI
SPI_MISO
SPI_SCK
VCC_5V_SB
MFG_NC0
MFG_NC1
VCC
VCC
VCC

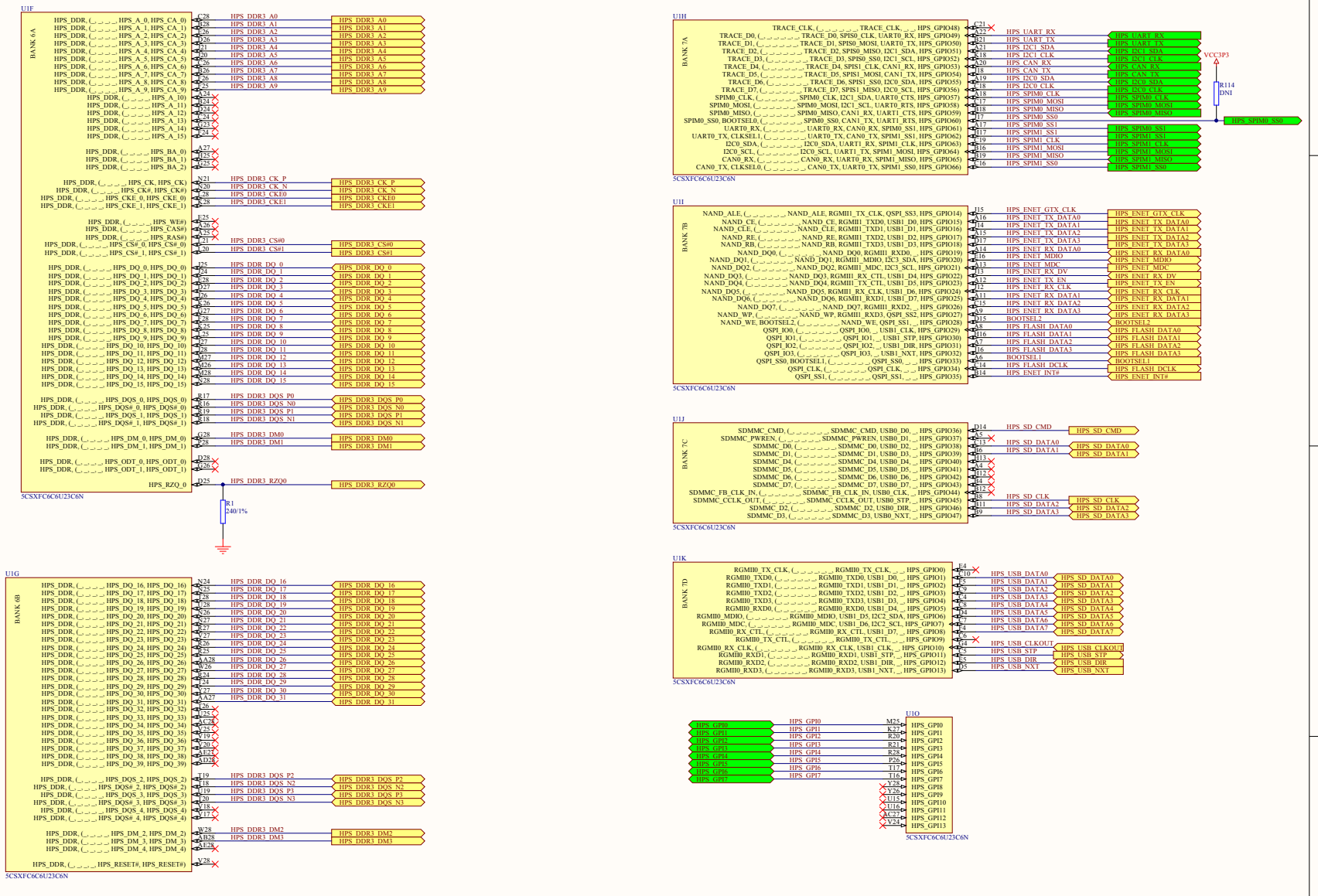
U1F
BANK 6A
HPS_DDR_(_ _ _ _ _ HPS_A_0, HPS_CA_0)
HPS_DDR_(_ _ _ _ _ HPS_A_1, HPS_CA_1)
HPS_DDR_(_ _ _ _ _ HPS_A_2, HPS_CA_2)
HPS_DDR_(_ _ _ _ _ HPS_A_3, HPS_CA_3)
HPS_DDR_(_ _ _ _ _ HPS_A_4, HPS_CA_4)
HPS_DDR_(_ _ _ _ _ HPS_A_5, HPS_CA_5)
HPS_DDR_(_ _ _ _ _ HPS_A_6, HPS_CA_6)
HPS_DDR_(_ _ _ _ _ HPS_A_7, HPS_CA_7)
HPS_DDR_(_ _ _ _ _ HPS_A_8, HPS_CA_8)
HPS_DDR_(_ _ _ _ _ HPS_A_9, HPS_CA_9)
HPS_DDR_(_ _ _ _ _ HPS_A_10)
HPS_DDR_(_ _ _ _ _ HPS_A_11)
HPS_DDR_(_ _ _ _ _ HPS_A_12)
HPS_DDR_(_ _ _ _ _ HPS_A_13)
HPS_DDR_(_ _ _ _ _ HPS_A_14)
HPS_DDR_(_ _ _ _ _ HPS_A_15)
HPS_DDR_(_ _ _ _ _ HPS_BA_0)
HPS_DDR_(_ _ _ _ _ HPS_BA_1)
HPS_DDR_(_ _ _ _ _ HPS_BA_2)
HPS_DDR_(_ _ _ _ _ HPS_CK, HPS_CK)
HPS_DDR_(_ _ _ _ _ HPS_CK#, HPS_CK#)
HPS_DDR_(_ _ _ _ _ HPS_CKE_0, HPS_CKE_0)
HPS_DDR_(_ _ _ _ _ HPS_CKE_1, HPS_CKE_1)
HPS_DDR_(_ _ _ _ _ HPS_WE#)
HPS_DDR_(_ _ _ _ _ HPS_CAS#)
HPS_DDR_(_ _ _ _ _ HPS_RAS#)
HPS_DDR_(_ _ _ _ _ HPS_CS#_0, HPS_CS#_0)
HPS_DDR_(_ _ _ _ _ HPS_CS#_1, HPS_CS#_1)
HPS_DDR_(_ _ _ _ _ HPS_DQ_0, HPS_DQ_0)
HPS_DDR_(_ _ _ _ _ HPS_DQ_1, HPS_DQ_1)
HPS_DDR_(_ _ _ _ _ HPS_DQ_2, HPS_DQ_2)
HPS_DDR_(_ _ _ _ _ HPS_DQ_3, HPS_DQ_3)
HPS_DDR_(_ _ _ _ _ HPS_DQ_4, HPS_DQ_4)
HPS_DDR_(_ _ _ _ _ HPS_DQ_5, HPS_DQ_5)
HPS_DDR_(_ _ _ _ _ HPS_DQ_6, HPS_DQ_6)
HPS_DDR_(_ _ _ _ _ HPS_DQ_7, HPS_DQ_7)
HPS_DDR_(_ _ _ _ _ HPS_DQ_8, HPS_DQ_8)
HPS_DDR_(_ _ _ _ _ HPS_DQ_9, HPS_DQ_9)
HPS_DDR_(_ _ _ _ _ HPS_DQ_10, HPS_DQ_10)
HPS_DDR_(_ _ _ _ _ HPS_DQ_11, HPS_DQ_11)
HPS_DDR_(_ _ _ _ _ HPS_DQ_12, HPS_DQ_12)
HPS_DDR_(_ _ _ _ _ HPS_DQ_13, HPS_DQ_13)
HPS_DDR_(_ _ _ _ _ HPS_DQ_14, HPS_DQ_14)
HPS_DDR_(_ _ _ _ _ HPS_DQ_15, HPS_DQ_15)
HPS_DDR_(_ _ _ _ _ HPS_DQS_0, HPS_DQS_0)
HPS_DDR_(_ _ _ _ _ HPS_DQS#_0, HPS_DQS#_0)
HPS_DDR_(_ _ _ _ _ HPS_DQS_1, HPS_DQS_1)
HPS_DDR_(_ _ _ _ _ HPS_DQS#_1, HPS_DQS#_1)
HPS_DDR_(_ _ _ _ _ HPS_DM_0, HPS_DM_0)
HPS_DDR_(_ _ _ _ _ HPS_DM_1, HPS_DM_1)
HPS_DDR_(_ _ _ _ _ HPS_ODT_0, HPS_ODT_0)
HPS_DDR_(_ _ _ _ _ HPS_ODT_1, HPS_ODT_1)
HPS_RZQ_0
C28 HPS_DDR3_A0
B28 HPS_DDR3_A1
C26 HPS_DDR3_A2
D26 HPS_DDR3_A3
D21 HPS_DDR3_A4
C20 HPS_DDR3_A5
E26 HPS_DDR3_A6
B26 HPS_DDR3_A7
E26 HPS_DDR3_A8
E25 HPS_DDR3_A9
B24
B24
B24
C24
B23
C24
G27
F25
F25
V21 HPS_DDR3_CK_P
V20 HPS_DDR3_CK_N
C28 HPS_DDR3_CKE0
C28 HPS_DDR3_CKE1
E25
G26
F25
G21 HPS_DDR3_CS#0
C20 HPS_DDR3_CS#1
J25 HPS_DDR_DQ_0
J24 HPS_DDR_DQ_1
F28 HPS_DDR_DQ_2
G27 HPS_DDR_DQ_3
G26 HPS_DDR_DQ_4
E26 HPS_DDR_DQ_5
G27 HPS_DDR_DQ_6
E28 HPS_DDR_DQ_7
E25 HPS_DDR_DQ_8
F25 HPS_DDR_DQ_9
F27 HPS_DDR_DQ_10
E28 HPS_DDR_DQ_11
G27 HPS_DDR_DQ_12
G26 HPS_DDR_DQ_13
E28 HPS_DDR_DQ_14
E28 HPS_DDR_DQ_15
R17 HPS_DDR3_DQS_P0
R16 HPS_DDR3_DQS_N0
R19 HPS_DDR3_DQS_P1
R18 HPS_DDR3_DQS_N1
G28 HPS_DDR3_DM0
E28 HPS_DDR3_DM1
D28
G26
D25 HPS_DDR3_RZQ0
R1
240/1%
5CSXFC6C6U23C6N
HPS_DDR3_A0
HPS_DDR3_A1
HPS_DDR3_A2
HPS_DDR3_A3
HPS_DDR3_A4
HPS_DDR3_A5
HPS_DDR3_A6
HPS_DDR3_A7
HPS_DDR3_A8
HPS_DDR3_A9
HPS_DDR3_CK_P
HPS_DDR3_CK_N
HPS_DDR3_CKE0
HPS_DDR3_CKE1
HPS_DDR3_CS#0
HPS_DDR3_CS#1
HPS_DDR_DQ_0
HPS_DDR_DQ_1
HPS_DDR_DQ_2
HPS_DDR_DQ_3
HPS_DDR_DQ_4
HPS_DDR_DQ_5
HPS_DDR_DQ_6
HPS_DDR_DQ_7
HPS_DDR_DQ_8
HPS_DDR_DQ_9
HPS_DDR_DQ_10
HPS_DDR_DQ_11
HPS_DDR_DQ_12
HPS_DDR_DQ_13
HPS_DDR_DQ_14
HPS_DDR_DQ_15
HPS_DDR3_DQS_P0
HPS_DDR3_DQS_N0
HPS_DDR3_DQS_P1
HPS_DDR3_DQS_N1
HPS_DDR3_DM0
HPS_DDR3_DM1
HPS_DDR3_RZQ0
U1G
BANK 6B
HPS_DDR_(_ _ _ _ _ HPS_DQ_16, HPS_DQ_16)
HPS_DDR_(_ _ _ _ _ HPS_DQ_17, HPS_DQ_17)
HPS_DDR_(_ _ _ _ _ HPS_DQ_18, HPS_DQ_18)
HPS_DDR_(_ _ _ _ _ HPS_DQ_19, HPS_DQ_19)
HPS_DDR_(_ _ _ _ _ HPS_DQ_20, HPS_DQ_20)
HPS_DDR_(_ _ _ _ _ HPS_DQ_21, HPS_DQ_21)
HPS_DDR_(_ _ _ _ _ HPS_DQ_22, HPS_DQ_22)
HPS_DDR_(_ _ _ _ _ HPS_DQ_23, HPS_DQ_23)
HPS_DDR_(_ _ _ _ _ HPS_DQ_24, HPS_DQ_24)
HPS_DDR_(_ _ _ _ _ HPS_DQ_25, HPS_DQ_25)
HPS_DDR_(_ _ _ _ _ HPS_DQ_26, HPS_DQ_26)
HPS_DDR_(_ _ _ _ _ HPS_DQ_27, HPS_DQ_27)
HPS_DDR_(_ _ _ _ _ HPS_DQ_28, HPS_DQ_28)
HPS_DDR_(_ _ _ _ _ HPS_DQ_29, HPS_DQ_29)
HPS_DDR_(_ _ _ _ _ HPS_DQ_30, HPS_DQ_30)
HPS_DDR_(_ _ _ _ _ HPS_DQ_31, HPS_DQ_31)
HPS_DDR_(_ _ _ _ _ HPS_DQ_32, HPS_DQ_32)
HPS_DDR_(_ _ _ _ _ HPS_DQ_33, HPS_DQ_33)
HPS_DDR_(_ _ _ _ _ HPS_DQ_34, HPS_DQ_34)
HPS_DDR_(_ _ _ _ _ HPS_DQ_35, HPS_DQ_35)
HPS_DDR_(_ _ _ _ _ HPS_DQ_36, HPS_DQ_36)
HPS_DDR_(_ _ _ _ _ HPS_DQ_37, HPS_DQ_37)
HPS_DDR_(_ _ _ _ _ HPS_DQ_38, HPS_DQ_38)
HPS_DDR_(_ _ _ _ _ HPS_DQ_39, HPS_DQ_39)
HPS_DDR_(_ _ _ _ _ HPS_DQS_2, HPS_DQS_2)
HPS_DDR_(_ _ _ _ _ HPS_DQS#_2, HPS_DQS#_2)
HPS_DDR_(_ _ _ _ _ HPS_DQS_3, HPS_DQS_3)
HPS_DDR_(_ _ _ _ _ HPS_DQS#_3, HPS_DQS#_3)
HPS_DDR_(_ _ _ _ _ HPS_DQS_4, HPS_DQS_4)
HPS_DDR_(_ _ _ _ _ HPS_DQS#_4, HPS_DQS#_4)
HPS_DDR_(_ _ _ _ _ HPS_DM_2, HPS_DM_2)
HPS_DDR_(_ _ _ _ _ HPS_DM_3, HPS_DM_3)
HPS_DDR_(_ _ _ _ _ HPS_DM_4, HPS_DM_4)
HPS_DDR_(_ _ _ _ _ HPS_RESET#, HPS_RESET#)
N24 HPS_DDR_DQ_16
P25 HPS_DDR_DQ_17
P28 HPS_DDR_DQ_18
T28 HPS_DDR_DQ_19
N26 HPS_DDR_DQ_20
P27 HPS_DDR_DQ_21
P27 HPS_DDR_DQ_22
P27 HPS_DDR_DQ_23
N26 HPS_DDR_DQ_24
P25 HPS_DDR_DQ_25
AA28 HPS_DDR_DQ_26
W26 HPS_DDR_DQ_27
T24 HPS_DDR_DQ_28
T24 HPS_DDR_DQ_29
T27 HPS_DDR_DQ_30
AA27 HPS_DDR_DQ_31
N26
P25
AC28
P25
T19
U20
AE22
D28
T19 HPS_DDR3_DQS_P2
T18 HPS_DDR3_DQS_N2
T19 HPS_DDR3_DQS_P3
U20 HPS_DDR3_DQS_N3
T18
T17
W28 HPS_DDR3_DM2
AB28 HPS_DDR3_DM3
AE28
V28
5CSXFC6C6U23C6N
HPS_DDR_DQ_16
HPS_DDR_DQ_17
HPS_DDR_DQ_18
HPS_DDR_DQ_19
HPS_DDR_DQ_20
HPS_DDR_DQ_21
HPS_DDR_DQ_22
HPS_DDR_DQ_23
HPS_DDR_DQ_24
HPS_DDR_DQ_25
HPS_DDR_DQ_26
HPS_DDR_DQ_27
HPS_DDR_DQ_28
HPS_DDR_DQ_29
HPS_DDR_DQ_30
HPS_DDR_DQ_31
HPS_DDR3_DQS_P2
HPS_DDR3_DQS_N2
HPS_DDR3_DQS_P3
HPS_DDR3_DQS_N3
HPS_DDR3_DM2
HPS_DDR3_DM3
U1H
BANK 7A
TRACE_CLK, (_ _ _ _ _ _ TRACE_CLK, _ _ HPS_GPIO48)
TRACE_D0, (_ _ _ _ _ _ TRACE_D0, SPIS0_CLK, UART0_RX, HPS_GPIO49)
TRACE_D1, (_ _ _ _ _ _ TRACE_D1, SPIS0_MOSI, UART0_TX, HPS_GPIO50)
TRACE_D2, (_ _ _ _ _ _ TRACE_D2, SPIS0_MISO, I2C1_SDA, HPS_GPIO51)
TRACE_D3, (_ _ _ _ _ _ TRACE_D3, SPIS0_SS0, I2C1_SCL, HPS_GPIO52)
TRACE_D4, (_ _ _ _ _ _ TRACE_D4, SPIS1_CLK, CAN1_RX, HPS_GPIO53)
TRACE_D5, (_ _ _ _ _ _ TRACE_D5, SPIS1_MOSI, CAN1_TX, HPS_GPIO54)
TRACE_D6, (_ _ _ _ _ _ TRACE_D6, SPIS1_SS0, I2C0_SDA, HPS_GPIO55)
TRACE_D7, (_ _ _ _ _ _ TRACE_D7, SPIS1_MISO, I2C0_SCL, HPS_GPIO56)
SPIM0_CLK, (_ _ _ _ _ _ SPIM0_CLK, I2C1_SDA, UART0_CTS, HPS_GPIO57)
SPIM0_MOSI, (_ _ _ _ _ _ SPIM0_MOSI, I2C1_SCL, UART0_RTS, HPS_GPIO58)
SPIM0_MISO, (_ _ _ _ _ _ SPIM0_MISO, CAN1_RX, UART1_CTS, HPS_GPIO59)
SPIM0_SS0, BOOTSEL0, (_ _ _ _ _ _ SPIM0_SS0, CAN1_TX, UART1_RTS, HPS_GPIO60)
UART0_RX, (_ _ _ _ _ _ UART0_RX, CAN0_RX, SPIM0_SS1, HPS_GPIO61)
UART0_TX, CLKSEL1, (_ _ _ _ _ _ UART0_TX, CAN0_TX, SPIM1_SS1, HPS_GPIO62)
I2C0_SDA, (_ _ _ _ _ _ I2C0_SDA, UART1_RX, SPIM1_CLK, HPS_GPIO63)
I2C0_SCL, (_ _ _ _ _ _ I2C0_SCL, UART1_TX, SPIM1_MOSI, HPS_GPIO64)
CAN0_RX, (_ _ _ _ _ _ CAN0_RX, UART0_RX, SPIM1_MISO, HPS_GPIO65)
CAN0_TX, CLKSEL0, (_ _ _ _ _ _ CAN0_TX, UART0_TX, SPIM1_SS0, HPS_GPIO66)
C21
C22
C21 HPS_UART_RX
C21 HPS_UART_TX
C21 HPS_I2C1_SDA
C18 HPS_I2C1_CLK
C20 HPS_CAN_RX
C18 HPS_CAN_TX
C19 HPS_I2C0_SDA
C18 HPS_I2C0_CLK
C18 HPS_SPIM0_CLK
C17 HPS_SPIM0_MOSI
C18 HPS_SPIM0_MISO
C17 HPS_SPIM0_SS0
C17 HPS_SPIM0_SS1
C17 HPS_SPIM1_SS1
C19 HPS_SPIM1_CLK
B16 HPS_SPIM1_MOSI
C19 HPS_SPIM1_MISO
B16 HPS_SPIM1_SS0
VCC3P3
R114
DNI
HPS_SPIM0_SS0
HPS_UART_RX
HPS_UART_TX
HPS_I2C1_SDA
HPS_I2C1_CLK
HPS_CAN_RX
HPS_CAN_TX
HPS_I2C0_SDA
HPS_I2C0_CLK
HPS_SPIM0_CLK
HPS_SPIM0_MOSI
HPS_SPIM0_MISO
HPS_SPIM0_SS0
HPS_SPIM1_SS1
HPS_SPIM1_CLK
HPS_SPIM1_MOSI
HPS_SPIM1_MISO
HPS_SPIM1_SS0
5CSXFC6C6U23C6N
U1I
BANK 7B
NAND_ALE, (_ _ _ _ _ _ NAND_ALE, RGMII1_TX_CLK, QSPI_SS3, HPS_GPIO14)
NAND_CE, (_ _ _ _ _ _ NAND_CE, RGMII1_TXD0, USB1_D0, HPS_GPIO15)
NAND_CLE, (_ _ _ _ _ _ NAND_CLE, RGMII1_TXD1, USB1_D1, HPS_GPIO16)
NAND_RE, (_ _ _ _ _ _ NAND_RE, RGMII1_TXD2, USB1_D2, HPS_GPIO17)
NAND_RB, (_ _ _ _ _ _ NAND_RB, RGMII1_TXD3, USB1_D3, HPS_GPIO18)
NAND_DQ0, (_ _ _ _ _ _ NAND_DQ0, RGMII1_RXD0, _ HPS_GPIO19)
NAND_DQ1, (_ _ _ _ _ _ NAND_DQ1, RGMII1_MDIO, I2C3_SDA, HPS_GPIO20)
NAND_DQ2, (_ _ _ _ _ _ NAND_DQ2, RGMII1_MDC, I2C3_SCL, HPS_GPIO21)
NAND_DQ3, (_ _ _ _ _ _ NAND_DQ3, RGMII1_RX_CTL, USB1_D4, HPS_GPIO22)
NAND_DQ4, (_ _ _ _ _ _ NAND_DQ4, RGMII1_TX_CTL, USB1_D5, HPS_GPIO23)
NAND_DQ5, (_ _ _ _ _ _ NAND_DQ5, RGMII1_RX_CLK, USB1_D6, HPS_GPIO24)
NAND_DQ6, (_ _ _ _ _ _ NAND_DQ6, RGMII1_RXD1, USB1_D7, HPS_GPIO25)
NAND_DQ7, (_ _ _ _ _ _ NAND_DQ7, RGMII1_RXD2, _ HPS_GPIO26)
NAND_WP, (_ _ _ _ _ _ NAND_WP, RGMII1_RXD3, QSPI_SS2, HPS_GPIO27)
NAND_WE, BOOTSEL2, (_ _ _ _ _ _ NAND_WE, QSPI_SS1, _ HPS_GPIO28)
QSPI_IO0, (_ _ _ _ _ _ QSPI_IO0, _ USB1_CLK, HPS_GPIO29)
QSPI_IO1, (_ _ _ _ _ _ QSPI_IO1, _ USB1_STP, HPS_GPIO30)
QSPI_IO2, (_ _ _ _ _ _ QSPI_IO2, _ USB1_DIR, HPS_GPIO31)
QSPI_IO3, (_ _ _ _ _ _ QSPI_IO3, _ USB1_NXT, HPS_GPIO32)
QSPI_SS0, BOOTSEL1, (_ _ _ _ _ _ QSPI_SS0, _ _ HPS_GPIO33)
QSPI_CLK, (_ _ _ _ _ _ QSPI_CLK, _ _ HPS_GPIO34)
QSPI_SS1, (_ _ _ _ _ _ QSPI_SS1, _ _ HPS_GPIO35)
I15 HPS_ENET_GTX_CLK
K16 HPS_ENET_TX_DATA0
J14 HPS_ENET_TX_DATA1
K15 HPS_ENET_TX_DATA2
J17 HPS_ENET_TX_DATA3
J14 HPS_ENET_RX_DATA0
J16 HPS_ENET_MDIO
J13 HPS_ENET_MDC
J13 HPS_ENET_RX_DV
K12 HPS_ENET_TX_EN
J12 HPS_ENET_RX_CLK
L11 HPS_ENET_RX_DATA1
L15 HPS_ENET_RX_DATA2
G9 HPS_ENET_RX_DATA3
B15 BOOTSEL2
J8 HPS_FLASH_DATA0
H16 HPS_FLASH_DATA1
G7 HPS_FLASH_DATA2
J16 HPS_FLASH_DATA3
G6 BOOTSEL1
J14 HPS_FLASH_DCLK
J14 HPS_ENET_INT#
HPS_ENET_GTX_CLK
HPS_ENET_TX_DATA0
HPS_ENET_TX_DATA1
HPS_ENET_TX_DATA2
HPS_ENET_TX_DATA3
HPS_ENET_RX_DATA0
HPS_ENET_MDIO
HPS_ENET_MDC
HPS_ENET_RX_DV
HPS_ENET_TX_EN
HPS_ENET_RX_CLK
HPS_ENET_RX_DATA1
HPS_ENET_RX_DATA2
HPS_ENET_RX_DATA3
BOOTSEL2
HPS_FLASH_DATA0
HPS_FLASH_DATA1
HPS_FLASH_DATA2
HPS_FLASH_DATA3
BOOTSEL1
HPS_FLASH_DCLK
HPS_ENET_INT#
5CSXFC6C6U23C6N
U1J
BANK 7C
SDMMC_CMD, (_ _ _ _ _ _ SDMMC_CMD, USB0_D0, _ HPS_GPIO36)
SDMMC_PWREN, (_ _ _ _ _ _ SDMMC_PWREN, USB0_D1, _ HPS_GPIO37)
SDMMC_D0, (_ _ _ _ _ _ SDMMC_D0, USB0_D2, _ HPS_GPIO38)
SDMMC_D1, (_ _ _ _ _ _ SDMMC_D1, USB0_D3, _ HPS_GPIO39)
SDMMC_D4, (_ _ _ _ _ _ SDMMC_D4, USB0_D4, _ HPS_GPIO40)
SDMMC_D5, (_ _ _ _ _ _ SDMMC_D5, USB0_D5, _ HPS_GPIO41)
SDMMC_D6, (_ _ _ _ _ _ SDMMC_D6, USB0_D6, _ HPS_GPIO42)
SDMMC_D7, (_ _ _ _ _ _ SDMMC_D7, USB0_D7, _ HPS_GPIO43)
SDMMC_FB_CLK_IN, (_ _ _ _ _ _ SDMMC_FB_CLK_IN, USB0_CLK, _ HPS_GPIO44)
SDMMC_CCLK_OUT, (_ _ _ _ _ _ SDMMC_CCLK_OUT, USB0_STP, _ HPS_GPIO45)
SDMMC_D2, (_ _ _ _ _ _ SDMMC_D2, USB0_DIR, _ HPS_GPIO46)
SDMMC_D3, (_ _ _ _ _ _ SDMMC_D3, USB0_NXT, _ HPS_GPIO47)
D14 HPS_SD_CMD
E13 HPS_SD_DATA0
D6 HPS_SD_DATA1
H13
G13
H12
G12
H8 HPS_SD_CLK
H11 HPS_SD_DATA2
J9 HPS_SD_DATA3
HPS_SD_CMD
HPS_SD_DATA0
HPS_SD_DATA1
HPS_SD_CLK
HPS_SD_DATA2
HPS_SD_DATA3
5CSXFC6C6U23C6N
U1K
BANK 7D
RGMII0_TX_CLK, (_ _ _ _ _ _ RGMII0_TX_CLK, _ _ HPS_GPIO0)
RGMII0_TXD0, (_ _ _ _ _ _ RGMII0_TXD0, USB1_D0, _ HPS_GPIO1)
RGMII0_TXD1, (_ _ _ _ _ _ RGMII0_TXD1, USB1_D1, _ HPS_GPIO2)
RGMII0_TXD2, (_ _ _ _ _ _ RGMII0_TXD2, USB1_D2, _ HPS_GPIO3)
RGMII0_TXD3, (_ _ _ _ _ _ RGMII0_TXD3, USB1_D3, _ HPS_GPIO4)
RGMII0_RXD0, (_ _ _ _ _ _ RGMII0_RXD0, USB1_D4, _ HPS_GPIO5)
RGMII0_MDIO, (_ _ _ _ _ _ RGMII0_MDIO, USB1_D5, I2C2_SDA, HPS_GPIO6)
RGMII0_MDC, (_ _ _ _ _ _ RGMII0_MDC, USB1_D6, I2C2_SCL, HPS_GPIO7)
RGMII0_RX_CTL, (_ _ _ _ _ _ RGMII0_RX_CTL, USB1_D7, _ HPS_GPIO8)
RGMII0_TX_CTL, (_ _ _ _ _ _ RGMII0_TX_CTL, _ _ HPS_GPIO9)
RGMII0_RX_CLK, (_ _ _ _ _ _ RGMII0_RX_CLK, USB1_CLK, _ HPS_GPIO10)
RGMII0_RXD1, (_ _ _ _ _ _ RGMII0_RXD1, USB1_STP, _ HPS_GPIO11)
RGMII0_RXD2, (_ _ _ _ _ _ RGMII0_RXD2, USB1_DIR, _ HPS_GPIO12)
RGMII0_RXD3, (_ _ _ _ _ _ RGMII0_RXD3, USB1_NXT, _ HPS_GPIO13)
E4
E10
E5 HPS_USB_DATA0
E9 HPS_USB_DATA1
E4 HPS_USB_DATA2
E8 HPS_USB_DATA3
D4 HPS_USB_DATA4
C7 HPS_USB_DATA5
E4 HPS_USB_DATA6
C6 HPS_USB_DATA7
E14
E5 HPS_USB_CLKOUT
E5 HPS_USB_STP
E5 HPS_USB_DIR
D5 HPS_USB_NXT
HPS_SD_DATA0
HPS_SD_DATA1
HPS_SD_DATA2
HPS_SD_DATA3
HPS_SD_DATA4
HPS_SD_DATA5
HPS_SD_DATA6
HPS_SD_DATA7
HPS_USB_CLKOUT
HPS_USB_STP
HPS_USB_DIR
HPS_USB_NXT
5CSXFC6C6U23C6N
U1O
HPS_GPI0
HPS_GPI1
HPS_GPI2
HPS_GPI3
HPS_GPI4
HPS_GPI5
HPS_GPI6
HPS_GPI7
M25 HPS_GPI0
K27 HPS_GPI1
R20 HPS_GPI2
R21 HPS_GPI3
R22 HPS_GPI4
P26 HPS_GPI5
T17 HPS_GPI6
T16 HPS_GPI7
Y28 HPS_GPI8
Y26 HPS_GPI9
U15 HPS_GPI10
U16 HPS_GPI11
AC27 HPS_GPI12
V24 HPS_GPI13
5CSXFC6C6U23C6N
Title
Size C
Number
Revision
Date: 7/14/2014
Sheet of
File: F:\CV23 V1.0\原理图\（3）HPS.Sch
Drawn By:

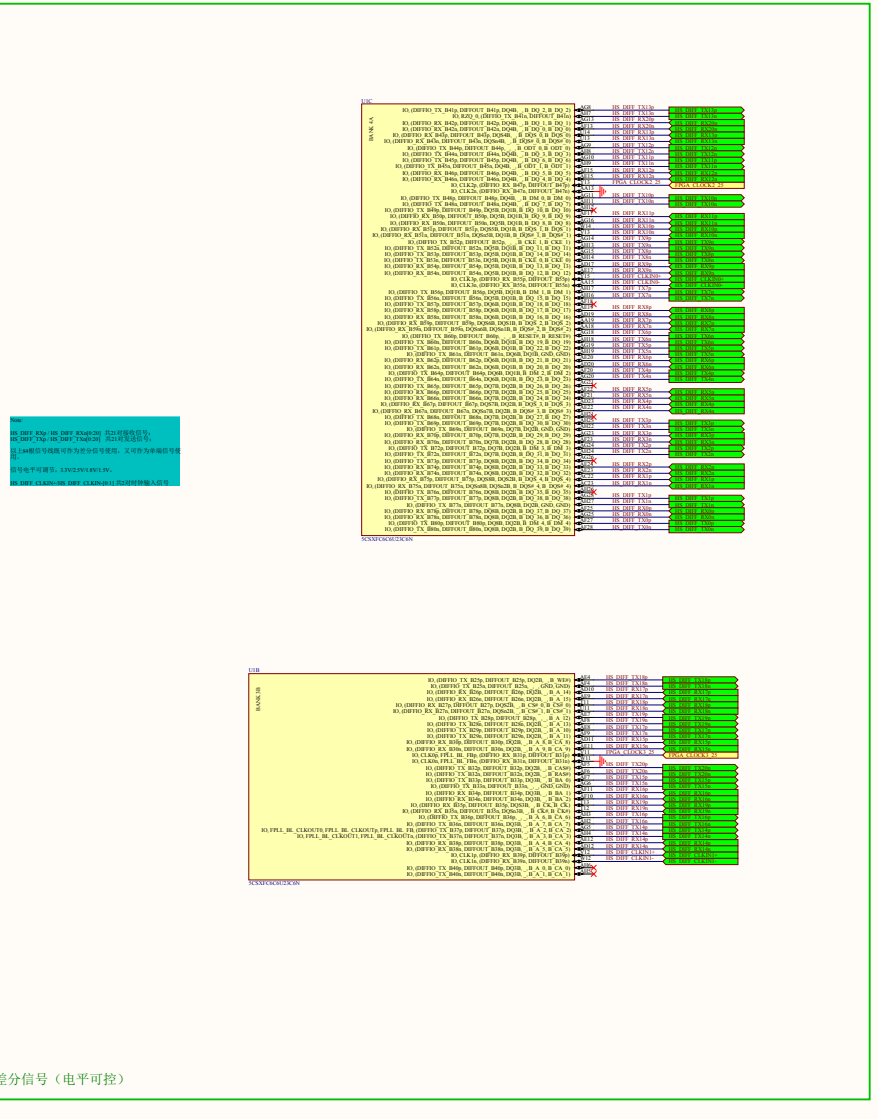
高速差分信号（电平可控）

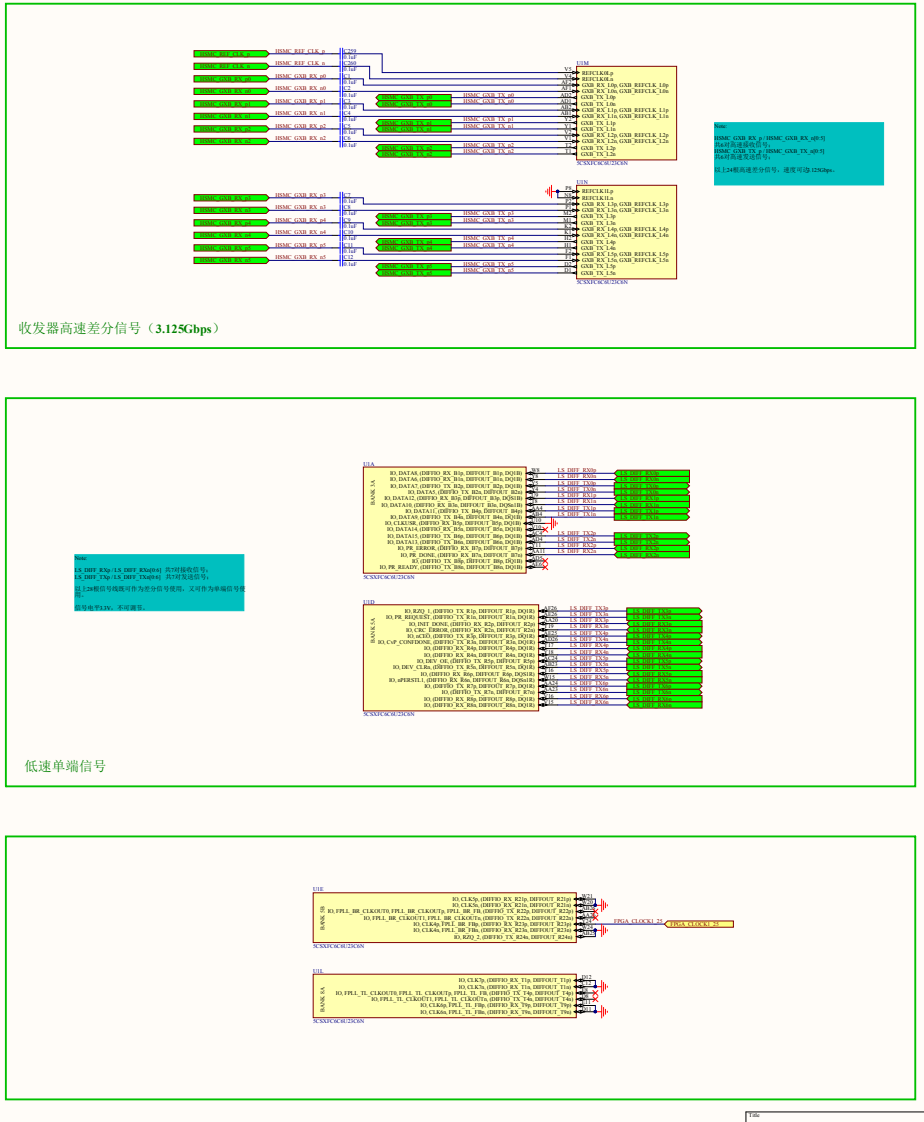
收发器高速差分信号（3.125Gbps）
低速单端信号

Comment	Description	Designator	Footprint	LibRef	Quantity
0.1uF	Capacitor	C1, C2, C3, C4, C5, C6, C7, C8, C9, C10, C11, C12, C23, C28, C31, C32, C37, C47, C48, C49, C53, C59, C60, C64, C70, C73, C74, C75, C76, C77, C146, C151, C159, C160, C161, C162, C165, C166, C167, C168, C169, C173, C174, C175, C185, C186, C187, C190, C193, C196, C199, C203, C204, C205, C206, C208, C209, C211, C214, C215, C216, C220, C233, C239, C259, C260, C261, C267, C282, C283	0402	CAP	70
0.01uF	Capacitor	C13, C14, C15, C16, C17, C22, C39, C40, C41, C42, C43, C52, C55, C56, C62, C63, C66, C68, C72, C90, C91, C92, C93, C94, C95, C96, C97, C98, C99, C100, C101, C102, C103, C104, C105, C106, C107, C108, C109, C110, C111, C112, C113, C147, C149, C176, C177, C178, C179	0402	CAP	49
1nF	Capacitor	C18, C19, C20, C27, C34, C44, C45, C46, C50, C51, C57, C58, C61, C65, C67, C71, C114, C115, C116, C117, C180, C181, C182, C183	0402	CAP	24
10uF/6.3V	Capacitor	C26, C30, C195, C198, C201, C207, C210, C271, C276, C277	0603	CAP	10
10uF/10V	Capacitor	C170, C171, C189, C192, C202, C217, C218, C231, C232, C265, C266, C272, C279, C280, C281	0603	CAP	15
8200pF	Capacitor	C234	0402	CAP	1
22uF/4V	Capacitor	C235, C278	0603	CAP	2
1uF	Capacitor	C238	0402	CAP	1
18pF	Capacitor	C262, C263, C268, C269, C273, C274	0402	CAP	6
60ohm 3A		L1, L4, L5, L13, L14, L15, L16, L18	0603	INDUCTOR1	8
BEAD		L2, L7, L11, L12	0402	INDUCTOR1	4
1.5uH		L20	SPM6530	INDUCTOR1	1
2.2uH		L21, L22, L23, L24, L25, L26	0806	INDUCTOR1	6
OSC_25MHz		OSC1, OSC2, OSC3	SMD4	HEADER 2X2	3
OSC_24MHz		OSC4	SMD4	HEADER 2X2	1
240/1%		R1, R28	0402	RES2	2
2K/1%		R2, R30, R31, R32, R33	0402	RES2	5
1K		R3, R4, R6, R12, R79, R80	0402	RES2	6
0		R5, R13, R14, R93, R153	0402	RES2	5
10K		R7, R8, R9, R10, R11, R15, R17, R18, R19, R20, R24, R25, R39, R40, R58, R59, R67, R72, R73	0402	RES2	19
4.7K		R27, R41, R45, R46, R47, R48, R49, R50, R54, R55, R56, R57	0402	RES2	12
DNI		R29, R42, R43, R44, R61, R62, R63, R64, R114, R117, R118, R139, R140, R141, R142, R150, R151, R152	0402	RES2	18
4.99K/1%		R65	0402	RES2	1
22/1%		R70	0402	RES2	1
12K/1%		R71	0402	RES2	1
100K		R74, R96, R115, R116, R138	0402	RES2	5
22.1K/1%		R75, R98	0402	RES2	2
820/1%		R77	0402	RES2	1
9.68K/1%		R97	0402	RES2	1
301K/1%		R119	0603	RES2	1
200K/1%		R120, R122, R129, R133, R134, R135	0603	RES2	6
475K/1%		R121	0603	RES2	1
909K/1%		R123, R126	0603	RES2	2
634K/1%		R124, R130	0603	RES2	2
500K		R125, R132, R137	0402	RES2	3
267K/1%		R127	0603	RES2	1
150K/1%		R128	0603	RES2	1
453K/1%		R131	0603	RES2	1
402K/1%		R136	0603	RES2	1
49.9/1%		R143, R144, R145, R146, R147, R148	0402	RES2	6
HRM-02	DIP Switch	SW1, SW2, SW3	SW-2	SW DIP-2	3
5CSXFC6C6U23C6N	Cyclone V SX Family FPGA, 1.07 to 1.13 V Supply, 145 I/O Pins, 6 PLLs, 672-Pin UBGA, Speed Grade 6, Commercial Grade, RoHS Compliant	U1	UBGA672	5CSXFC6C6U23C6N	1
MT42L128M32D1LF		U3	FBGA168	Component_1	1
S25FL512S		U4	TBGA-24	HEADER 25	1
M25P64VME	8 Pin Header	U5	VDFPN8	8 HEADER	1
KSZ9021RN		U6	QFN48	HEADER 25X2	1
USB3300-EZK		U7	QFN32	HEADER 16X2	1
NCP1532	Connector	U8, U9, U10	UDFN10	CON10	3
TS5A3359	Connector	U13, U14	DCU8	CON8	2
SN74AVC1T45DRLR	Connector	U15	SOT-553	CON6	1
ESD5V3U2U-03F		U17, U18, U19	TSFP-3	HEADER 3	3
TPS2553DRVR		U20	DRV6	HEADER 7	1
TPS54526RSA		U22	RSA16	16PIN	1
MXM230		X1	MXM230	50PIN	1
Micro SD	Connector	X2	SD08	MICRO SD	1