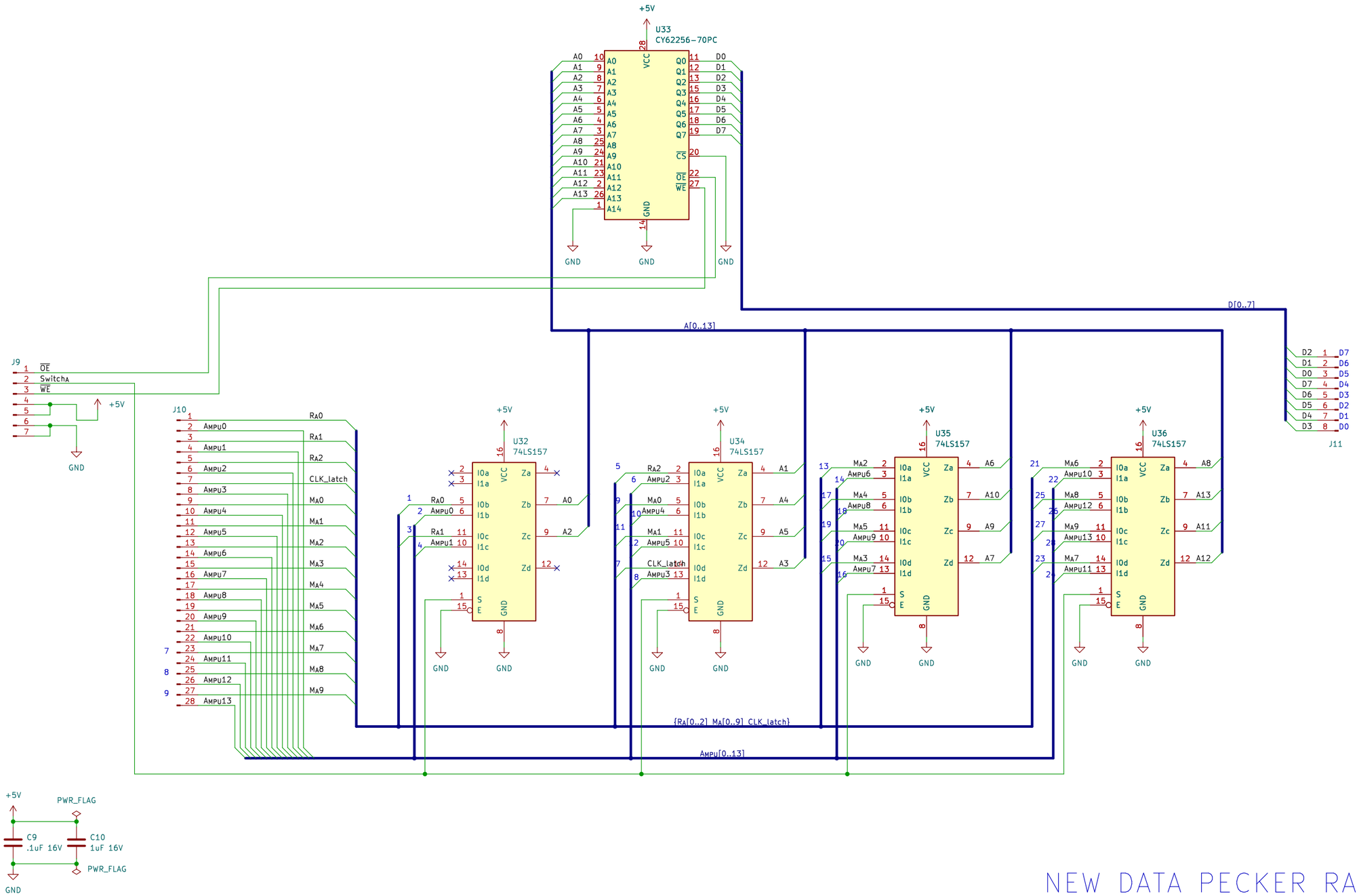

NEW DATA PECKER RAM BOARD

Author: InsaneDruid
License: CC BY 4.0
creativecommons.org/licenses/by/4.0/
made in 2022

Sheet: /
File: dph_ram_optimized.kicad_sch

Title: New Data Pecker RAM Board

Size: A3	Date: 2022-11-17	Rev: V001
KiCad E.D.A. kicad 7.0.5		Id: 1/1