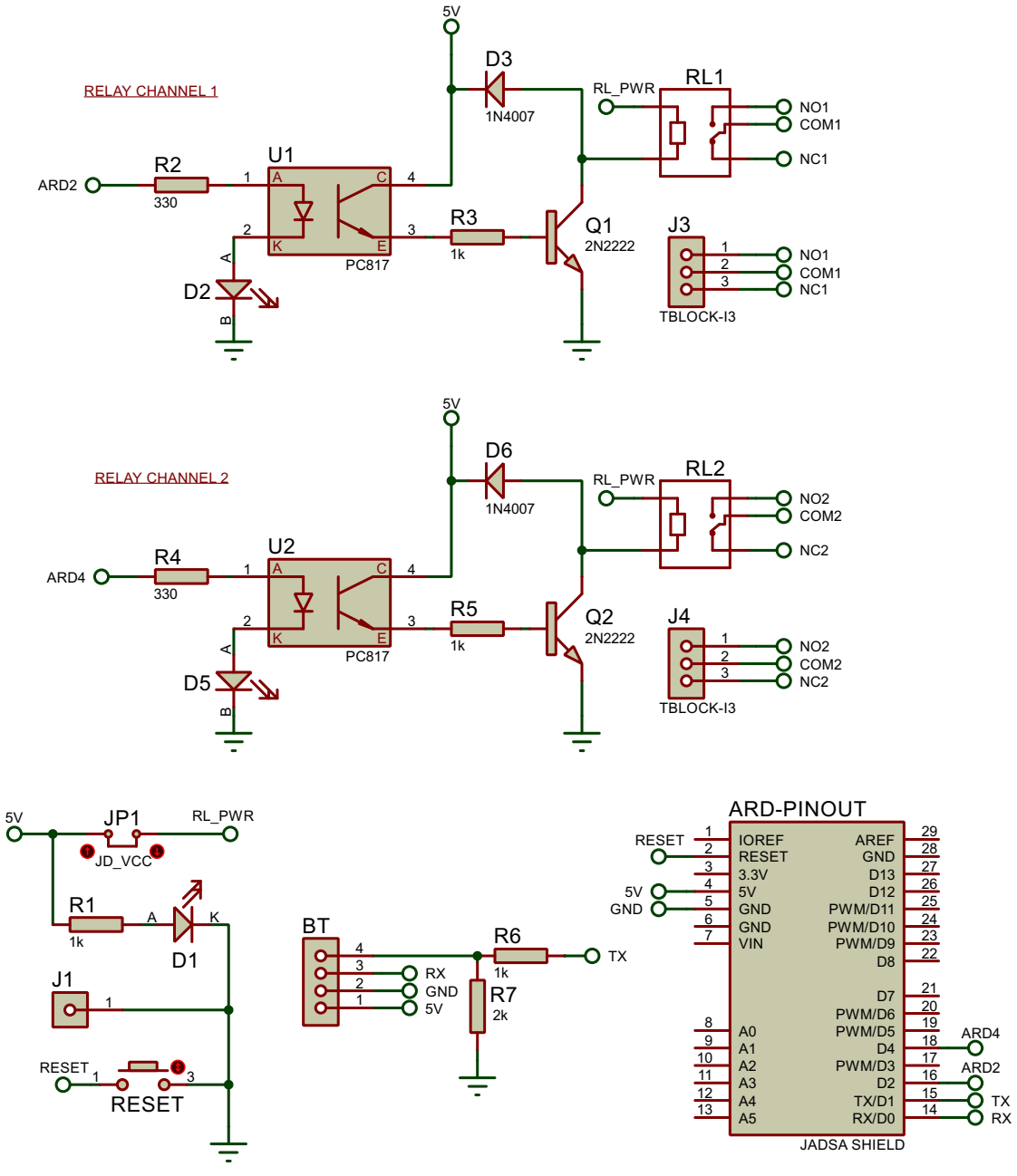
RELAY CHANNEL 1
5V
D3
1N4007
RL_PWR
RL1
NO1
COM1
NC1
ARD2
R2
330
U1
A
C
K
E
PC817
R3
1k
Q1
2N2222
J3
TBLOCK-I3
D2
RELAY CHANNEL 2
D6
1N4007
RL2
NO2
COM2
NC2
ARD4
R4
330
U2
R5
1k
Q2
2N2222
J4
TBLOCK-I3
D5
JP1
JD_VCC
R1
1k
D1
J1
RESET
BT
RX
GND
R6
1k
R7
2k
TX
ARD-PINOUT
IOREF
RESET
3.3V
5V
GND
GND
VIN
A0
A1
A2
A3
A4
A5
AREF
GND
D13
D12
PWM/D11
PWM/D10
PWM/D9
D8
D7
PWM/D6
PWM/D5
D4
PWM/D3
D2
TX/D1
RX/D0
JADSA SHIELD