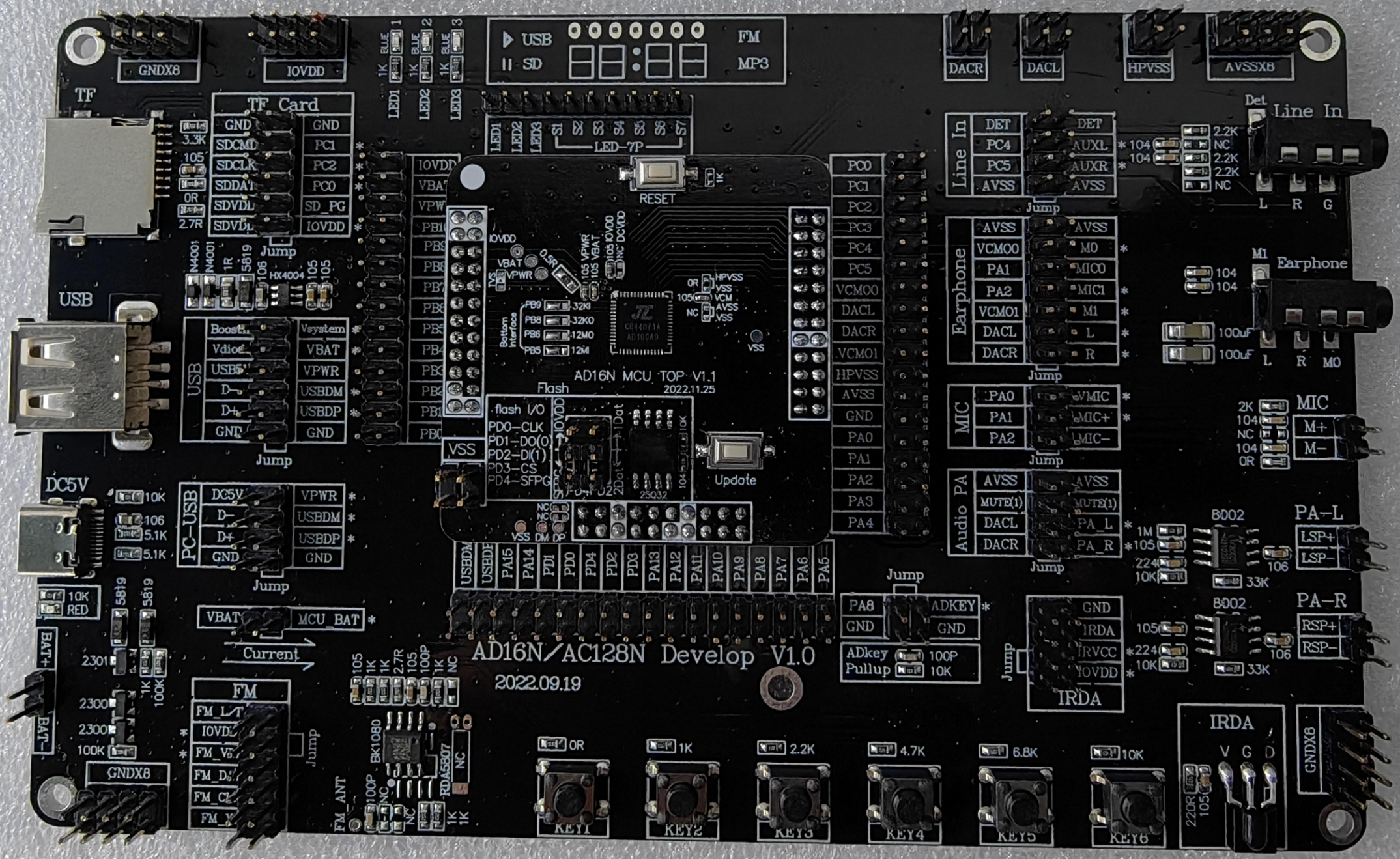
AD16N/AC128N Develop V1.0
2022.09.19
AD16N MCU TOP V1.1
2022.11.25
TF Card
USB
PC-USB
FM
Line In
Earphone
MIC
Audio PA
IRDA
LED-7P
RESET
Update
Flash
Current
KEY1
KEY2
KEY3
KEY4
KEY5
KEY6
GNDX8
IOVDD
DACR
DACL
HPVSS
AVSSX8
DC5V
BAT+
BAT-
PA-L
PA-R

开发板底板原理图

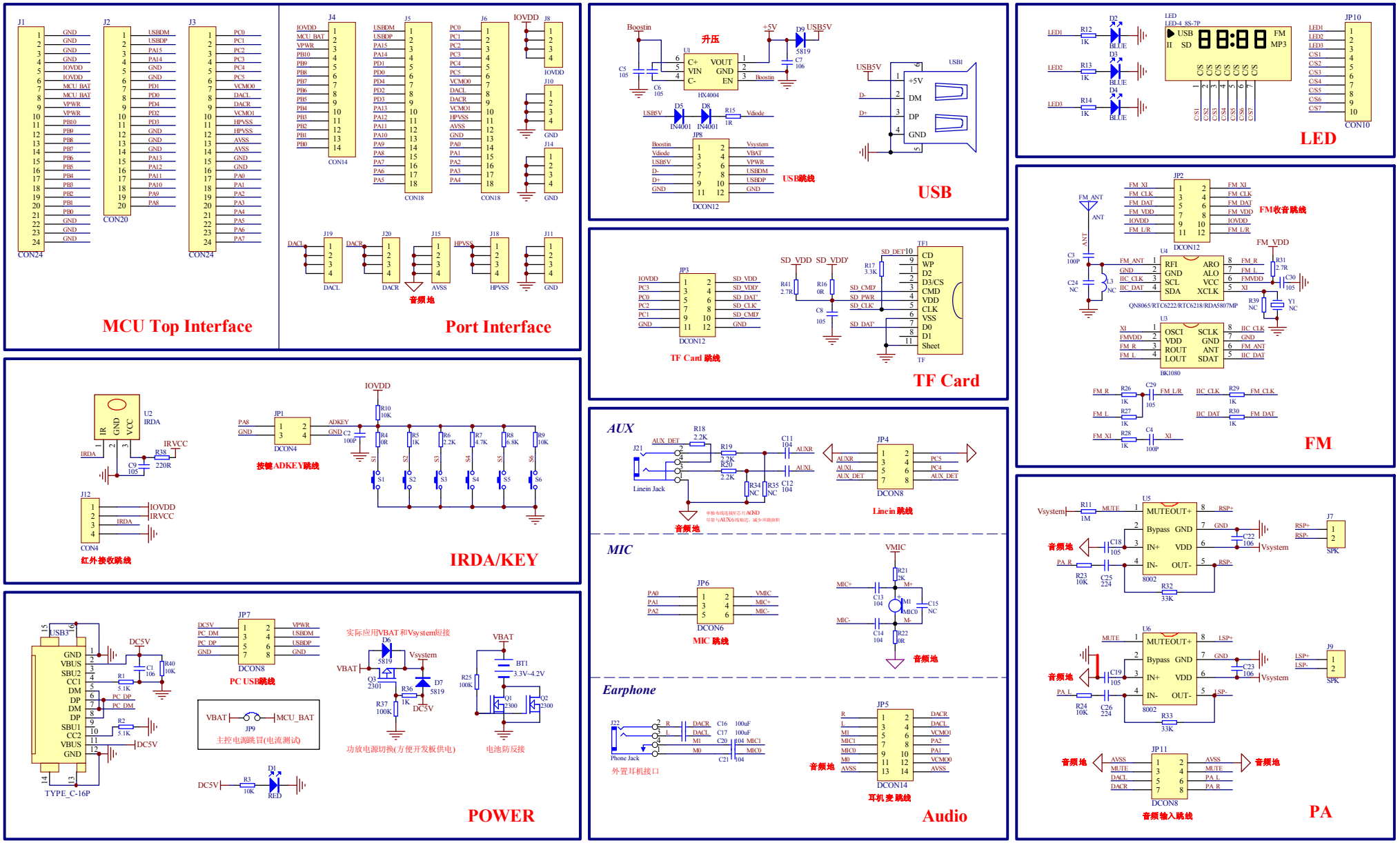
MCU Top Interface
Port Interface
IRDA/KEY
POWER
USB
LED
FM
PA
TF Card
Audio
AUX
MIC
Earphone
升压
USB跳线
TF Card 跳线
FM收音跳线
音频地
按键ADKEY跳线
红外接收跳线
PC USB跳线
主控电源跳冒(电流测试)
功放电源切换(方便开发板供电)
电池防反接
MIC 跳线
Linein 跳线
外置耳机接口
耳机变 跳线
音频输入跳线

开发板顶板原理图

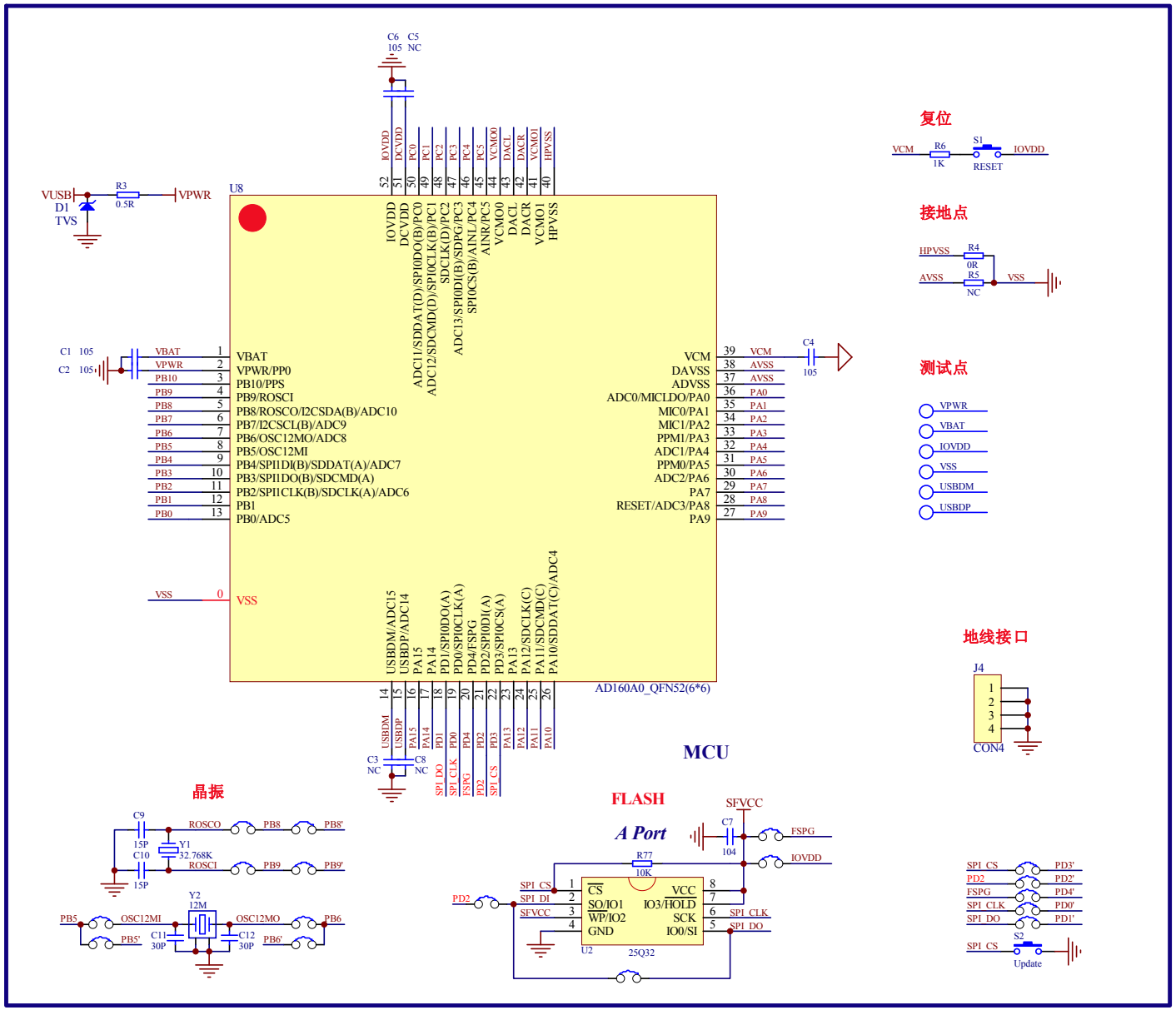

MCU

复位

接地点

测试点

地线接口

晶振

FLASH

A Port

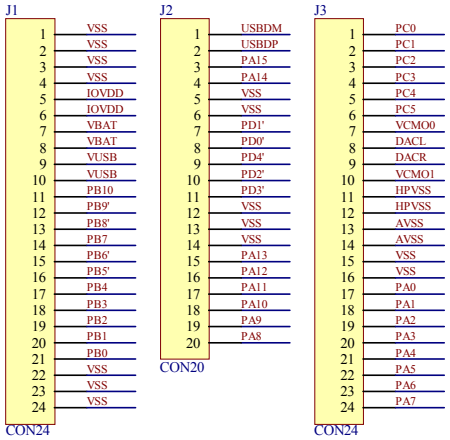

MCU Interface

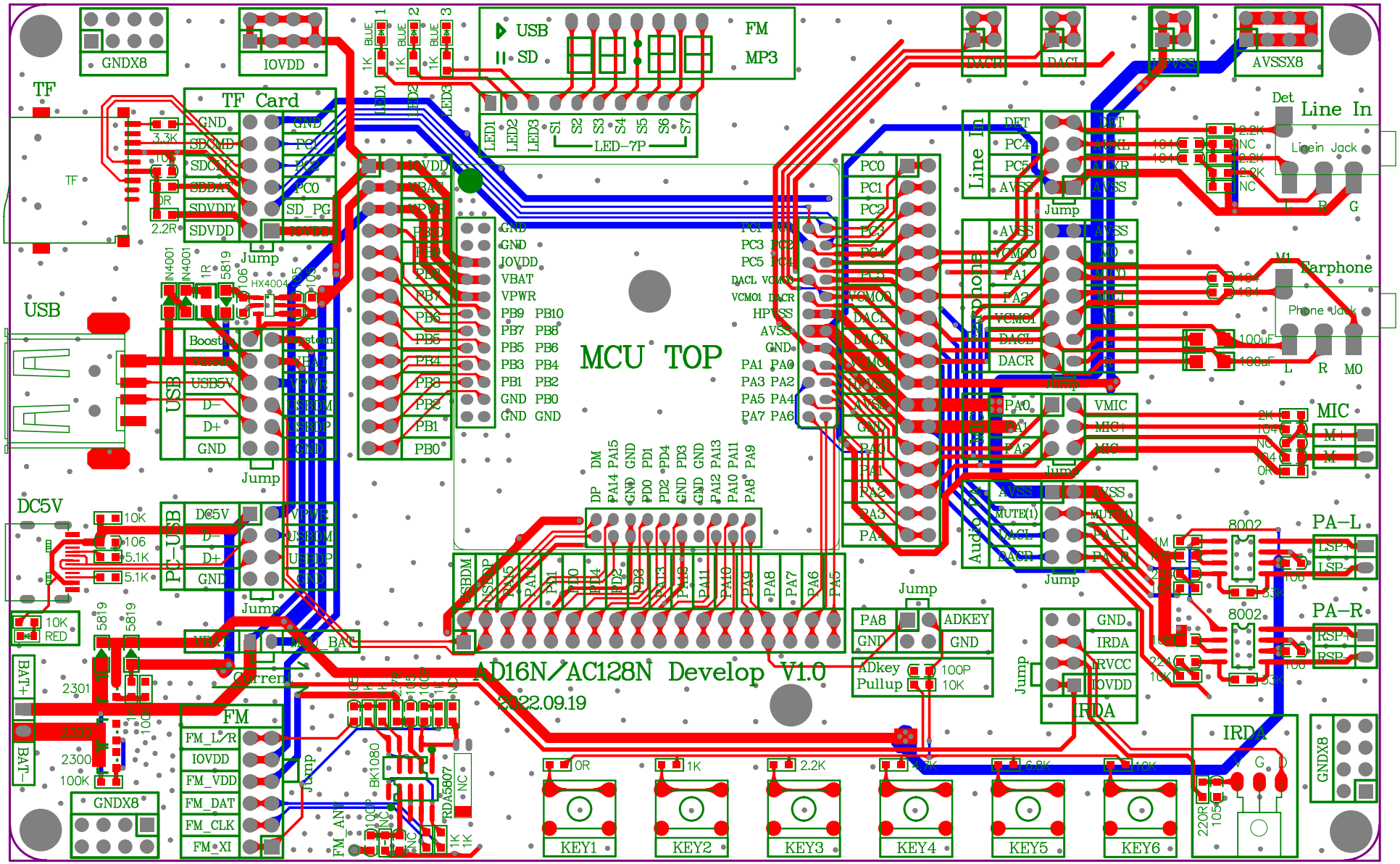
MCU TOP
AD16N/AC128N Develop V1.0
2022.09.19
TF
TF Card
USB
DC5V
PC-USB
FM
Line In
Earphone
MIC
PA-L
PA-R
IRDA
LED-7P
KEY1
KEY2
KEY3
KEY4
KEY5
KEY6
Jump
GNDX8
IOVDD
AVSSX8
DACR
DACL
HPVSS
Det
Line in Jack
Phone Jack
Boost
Vbuck
USB5V
D-
D+
GND
DC5V
VBAT
VPWR
USBDM
USBDP
MCU_BAT
Current
ADKEY
ADkey Pullup
BAT+
BAT-
RDA5807
BK1080
FM_L/R
FM_VDD
FM_DAT
FM_CLK
FM_XI
FM_ANT
USB
SD
FM
MP3

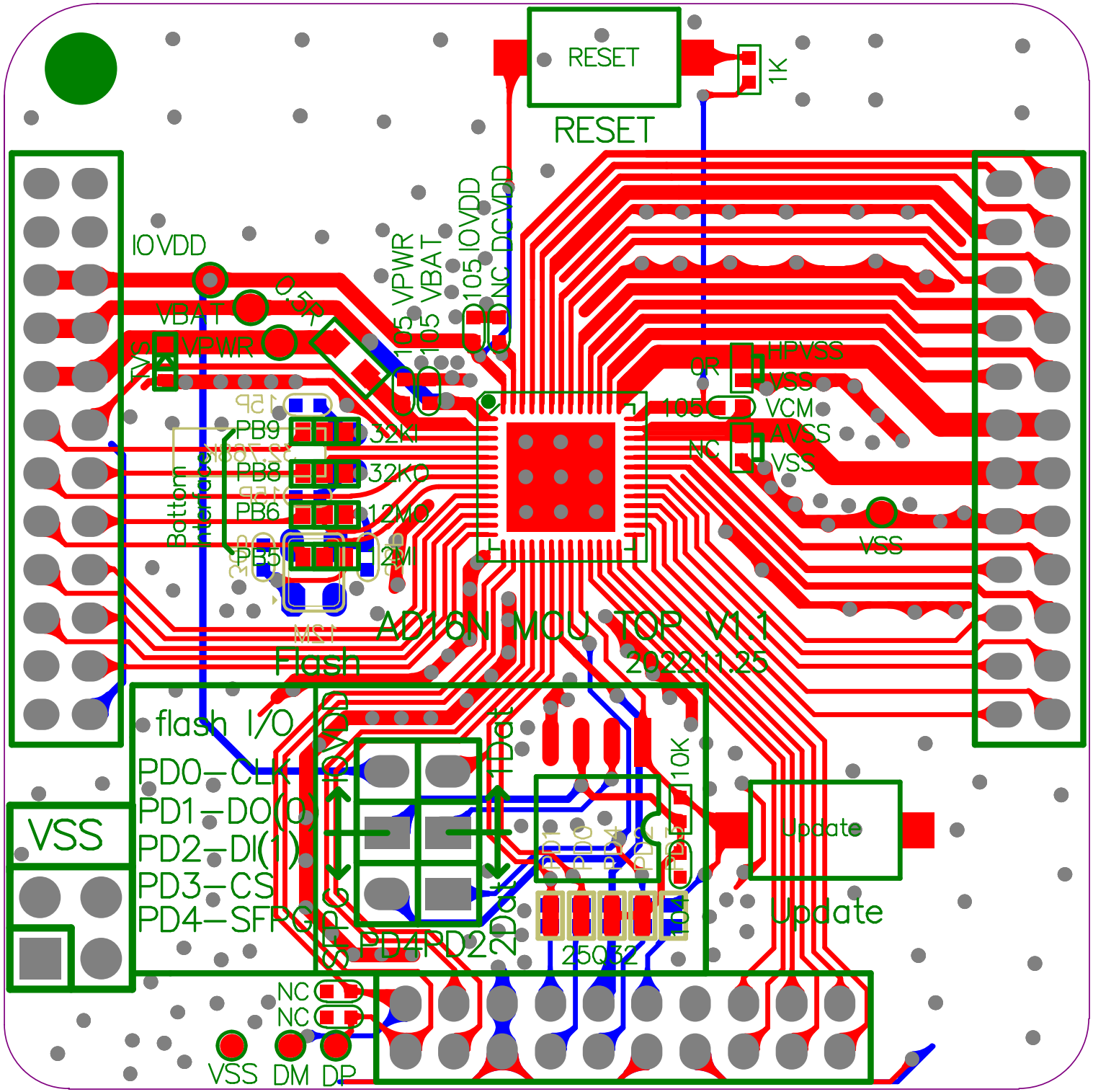
RESET
1K
RESET
IOVDD
VBAT
VPWR
105 VPWR
105 VBAT
105 IOVDD
NC DCVDD
HPVSS
0R
VSS
105
VCM
AVSS
NC
VSS
VSS
PB9
32KI
PB8
32KO
PB6
12MO
PB5
2M
Flash
AD16N MCU TOP V1.1
2022.11.25
flash I/O
PD0-CLK
PD1-DO(0)
PD2-DI(1)
PD3-CS
PD4-SFPGO
PD4
PD2
2Dat
1Dat
10K
PD5
25Q32
Update
Update
VSS
NC
NC
VSS
DM
DP