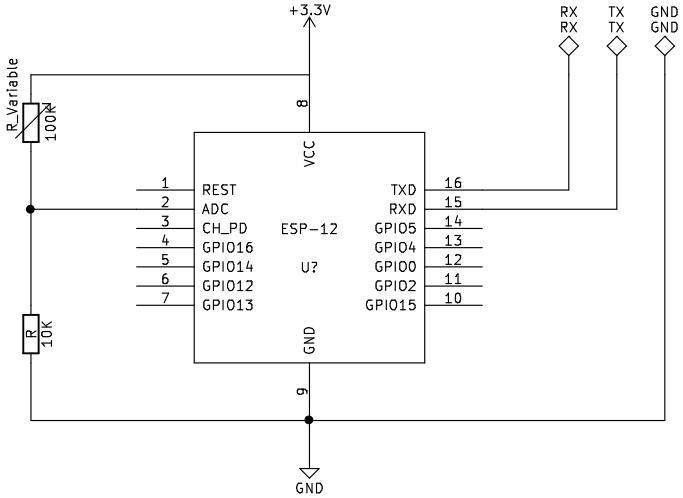

John W Grun

Sheet: /

File: Kalman_Data_collection.sch

Title: Sensor collection for Kalman filter

Size: A4	Date: 2017-04-28	**Rev: 1.0**
KiCad E.D.A. kicad 4.0.6-e0-634953ubuntu16.04.1		Id: 1/1