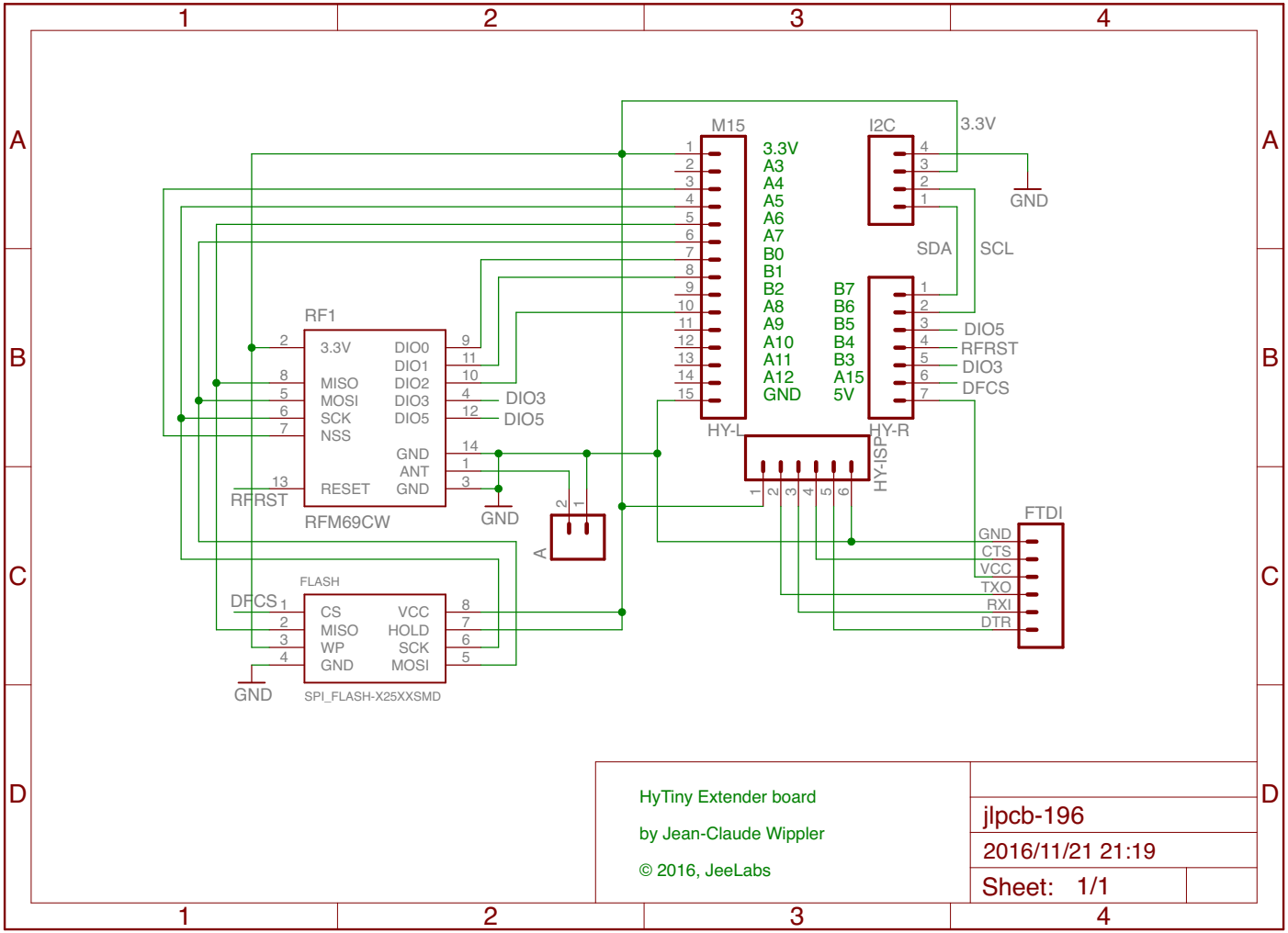

HyTiny Extender board

by Jean-Claude Wippler

© 2016, JeeLabs

jlpcb-196

2016/11/21 21:19

Sheet: 1/1