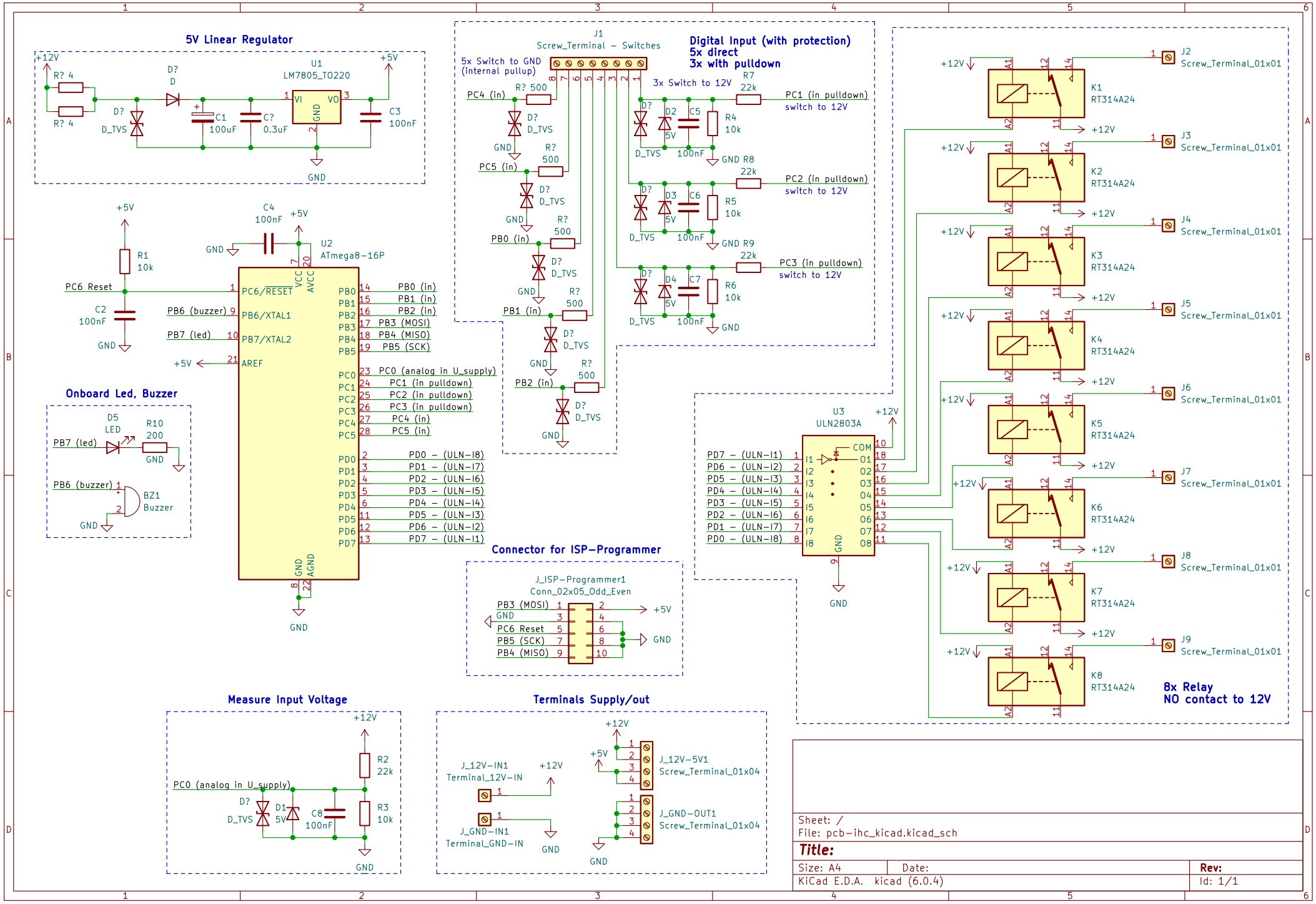
5V Linear Regulator
+12V
R? 4
R? 4
D?
D
D?
D_TVS
C1
100uF
C?
0.3uF
U1
LM7805_TO220
VI
VO
GND
+5V
C3
100nF
GND
J1
Screw_Terminal – Switches
5x Switch to GND
(internal pullup)
Digital Input (with protection)
5x direct
3x with pulldown
3x Switch to 12V
PC4 (in)
R? 500
PC5 (in)
R?
500
PB0 (in)
PB1 (in)
PB2 (in)
D?
D_TVS
GND
R7
22k
PC1 (in pulldown)
switch to 12V
D2
C5
5V
R4
10k
100nF
GND R8
22k
PC2 (in pulldown)
switch to 12V
D3
C6
R5
10k
GND R9
22k
PC3 (in pulldown)
switch to 12V
D4
C7
R6
10k
+5V
R1
10k
PC6 Reset
C2
100nF
C4
100nF
U2
ATmega8-16P
PB6 (buzzer)
PB7 (led)
PC6/RESET
PB6/XTAL1
PB7/XTAL2
AREF
VCC
AVCC
GND
AGND
PB0 (in)
PB1 (in)
PB2 (in)
PB3 (MOSI)
PB4 (MISO)
PB5 (SCK)
PC0 (analog in U_supply)
PC1 (in pulldown)
PC2 (in pulldown)
PC3 (in pulldown)
PC4 (in)
PC5 (in)
PD0 – (ULN–I8)
PD1 – (ULN–I7)
PD2 – (ULN–I6)
PD3 – (ULN–I5)
PD4 – (ULN–I4)
PD5 – (ULN–I3)
PD6 – (ULN–I2)
PD7 – (ULN–I1)
Onboard Led, Buzzer
D5
LED
R10
200
PB7 (led)
PB6 (buzzer)
BZ1
Buzzer
Connector for ISP–Programmer
J_ISP–Programmer1
Conn_02x05_Odd_Even
PB3 (MOSI)
GND
PC6 Reset
PB5 (SCK)
PB4 (MISO)
U3
ULN2803A
COM
PD7 – (ULN–I1)
PD6 – (ULN–I2)
PD5 – (ULN–I3)
PD4 – (ULN–I4)
PD3 – (ULN–I5)
PD2 – (ULN–I6)
PD1 – (ULN–I7)
PD0 – (ULN–I8)
K1
RT314A24
K2
RT314A24
K3
RT314A24
K4
RT314A24
K5
RT314A24
K6
RT314A24
K7
RT314A24
K8
RT314A24
J2
Screw_Terminal_01x01
J3
Screw_Terminal_01x01
J4
Screw_Terminal_01x01
J5
Screw_Terminal_01x01
J6
Screw_Terminal_01x01
J7
Screw_Terminal_01x01
J8
Screw_Terminal_01x01
J9
Screw_Terminal_01x01
8x Relay
NO contact to 12V
Measure Input Voltage
PC0 (analog in U_supply)
R2
22k
R3
10k
D?
D_TVS
D1
5V
C8
100nF
Terminals Supply/out
J_12V–IN1
Terminal_12V–IN
J_GND–IN1
Terminal_GND–IN
J_12V–5V1
Screw_Terminal_01x04
J_GND–OUT1
Screw_Terminal_01x04
Sheet: /
File: pcb–ihc_kicad.kicad_sch
Title:
Size: A4
Date:
Rev:
KiCad E.D.A. kicad (6.0.4)
Id: 1/1