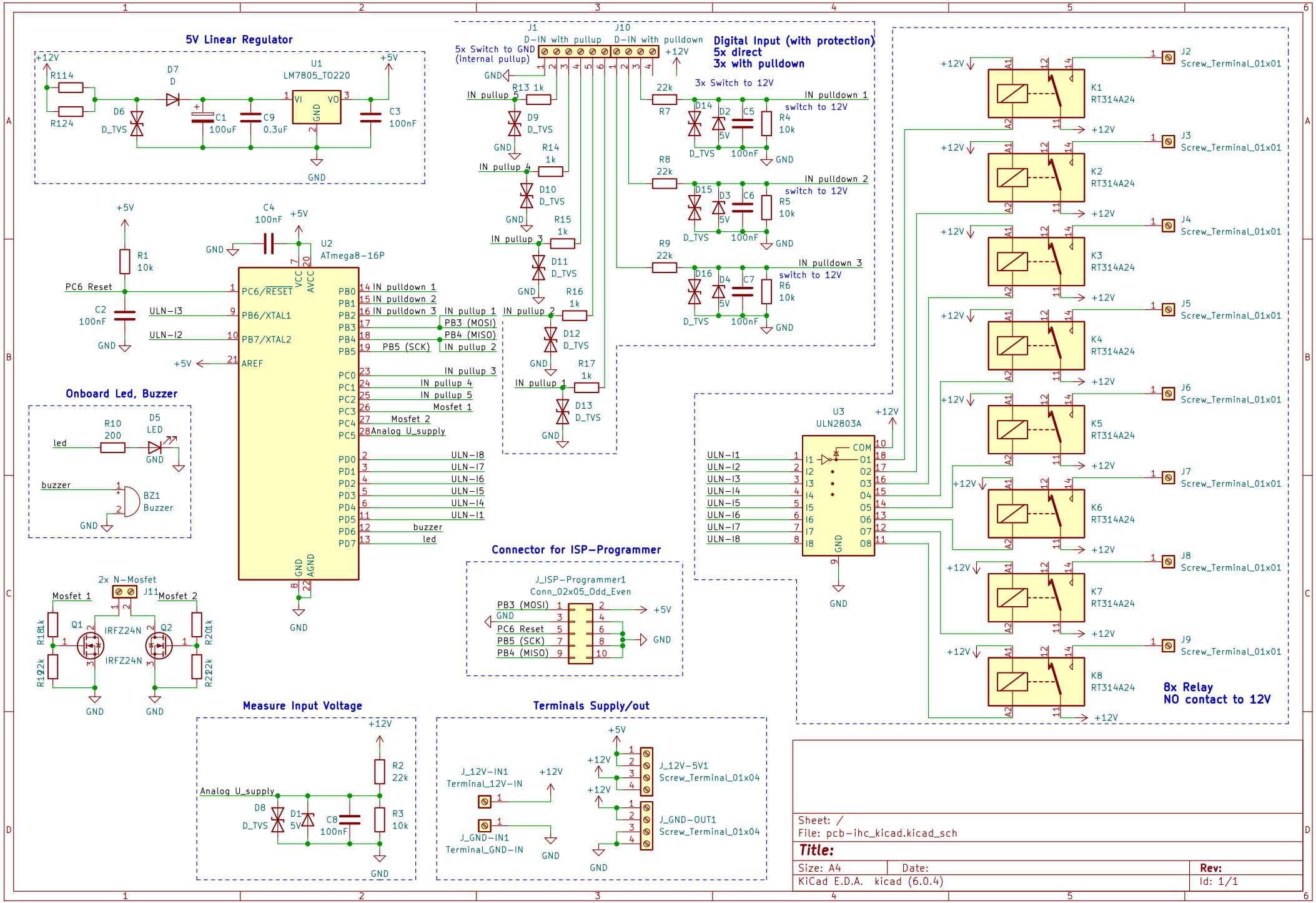
5V Linear Regulator
U1
LM7805_TO220
Digital Input (with protection)
5x direct
3x with pulldown
J1
J10
D-IN with pullup
D-IN with pulldown
5x Switch to GND
(internal pullup)
3x Switch to 12V
switch to 12V
U2
ATmega8-16P
Onboard Led, Buzzer
Connector for ISP-Programmer
J_ISP-Programmer1
Conn_02x05_Odd_Even
2x N-Mosfet
Mosfet 1
Mosfet 2
IRFZ24N
Measure Input Voltage
Analog_U_supply
Terminals Supply/out
J_12V-IN1
Terminal_12V-IN
J_GND-IN1
Terminal_GND-IN
J_12V-5V1
J_GND-OUT1
Screw_Terminal_01x04
U3
ULN2803A
K1
RT314A24
Screw_Terminal_01x01
8x Relay
NO contact to 12V
Sheet: /
File: pcb-ihc_kicad.kicad_sch
Title:
Size: A4
Date:
Rev:
KiCad E.D.A. kicad (6.0.4)
Id: 1/1