REVISIONS				
ZONE	REV	DESCRIPTION	DATE	APPROVED

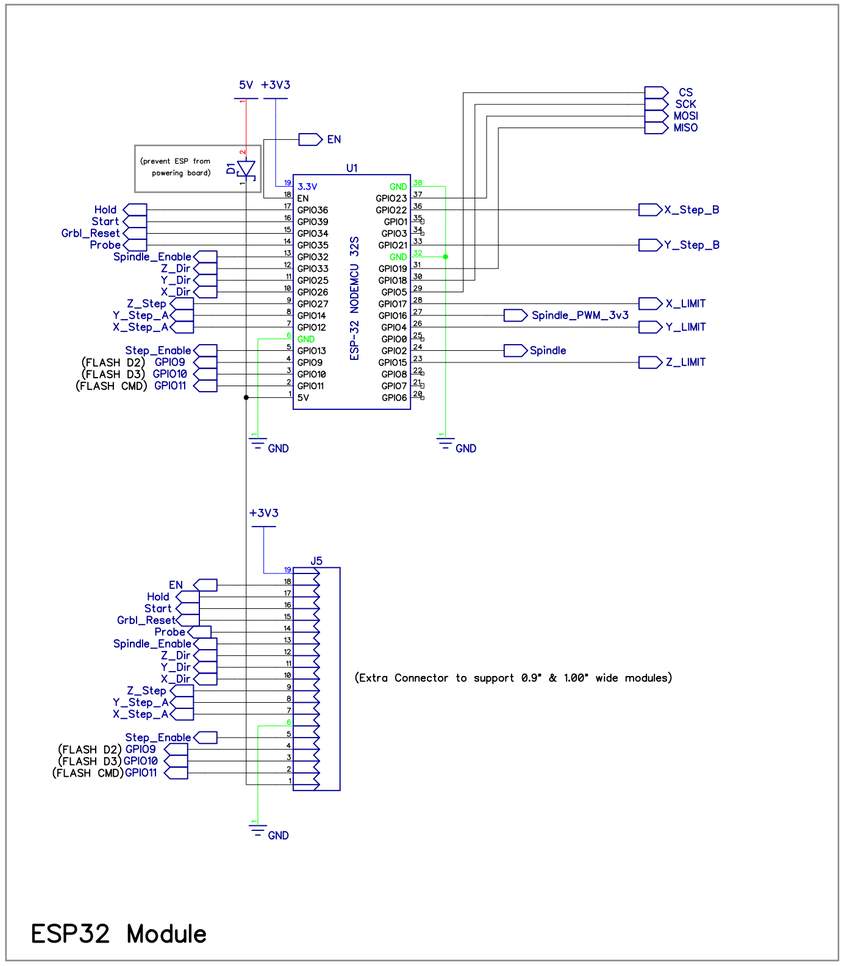

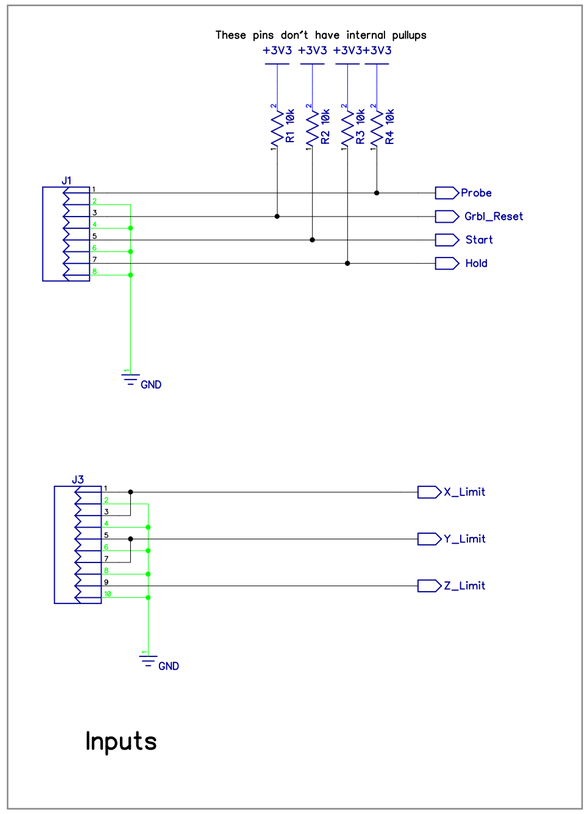

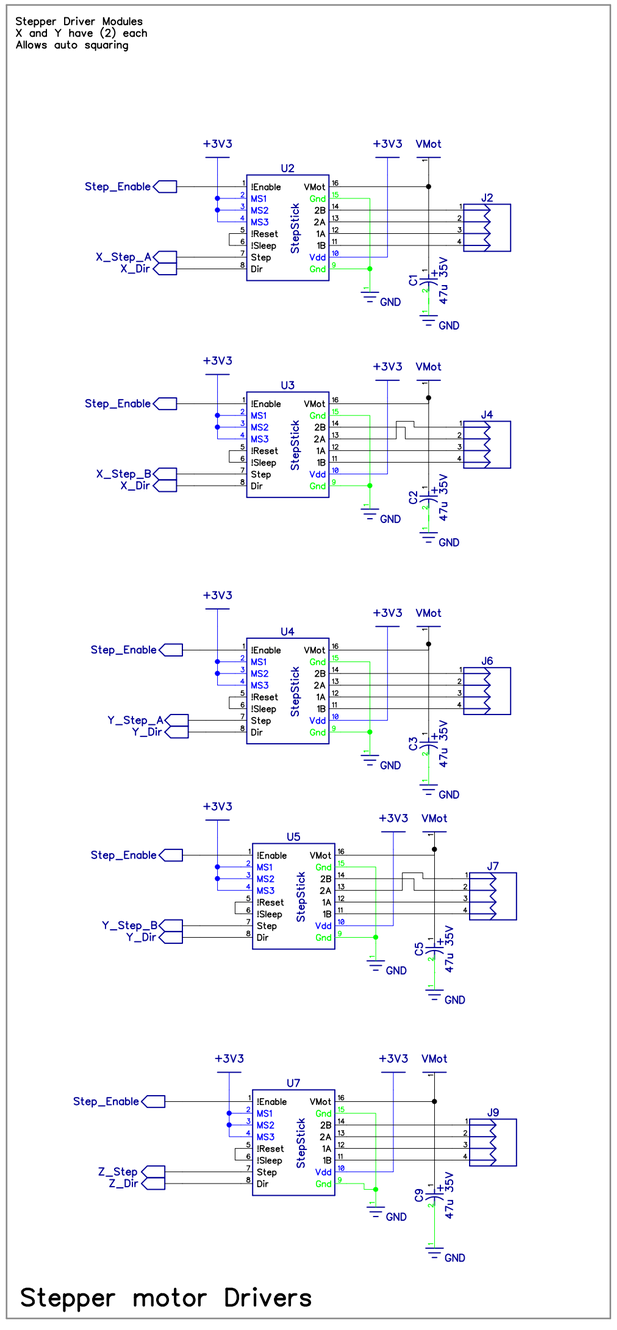

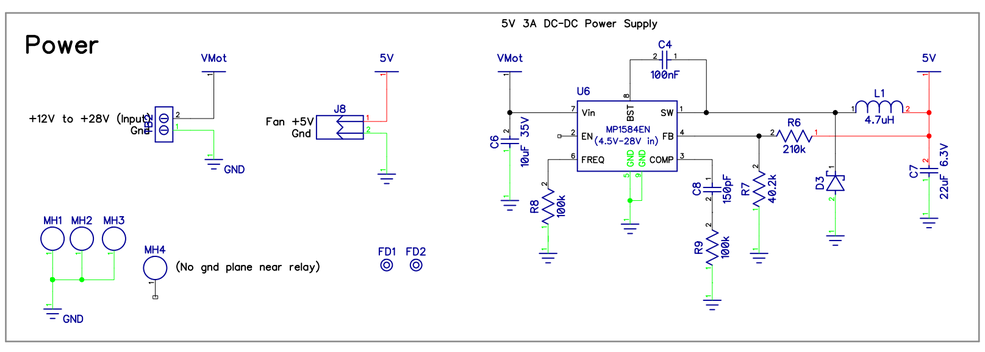

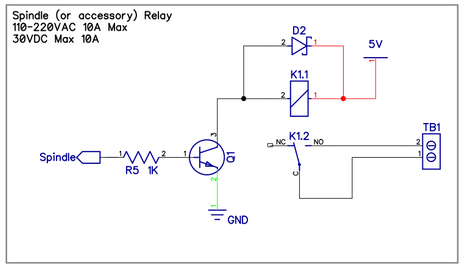

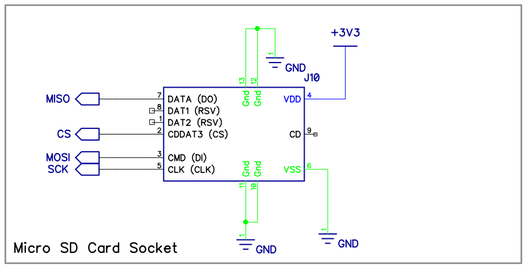

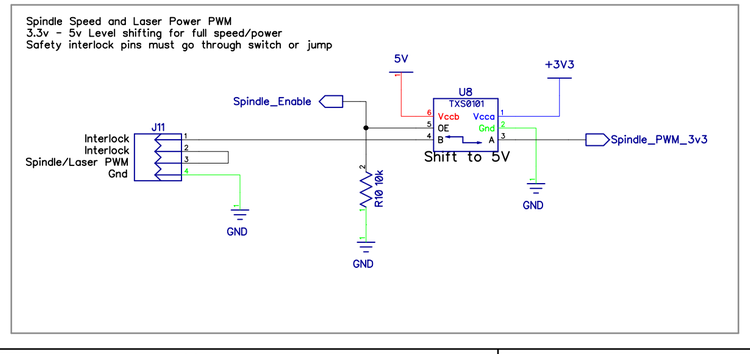

MPCNC Controller V1.2.1

A Controller for Grbl_ESP32

Buildlog.net	SIZE	FSCM NO.	DWG NO.	REV 1.2.1
	SCALE			Sheet 1