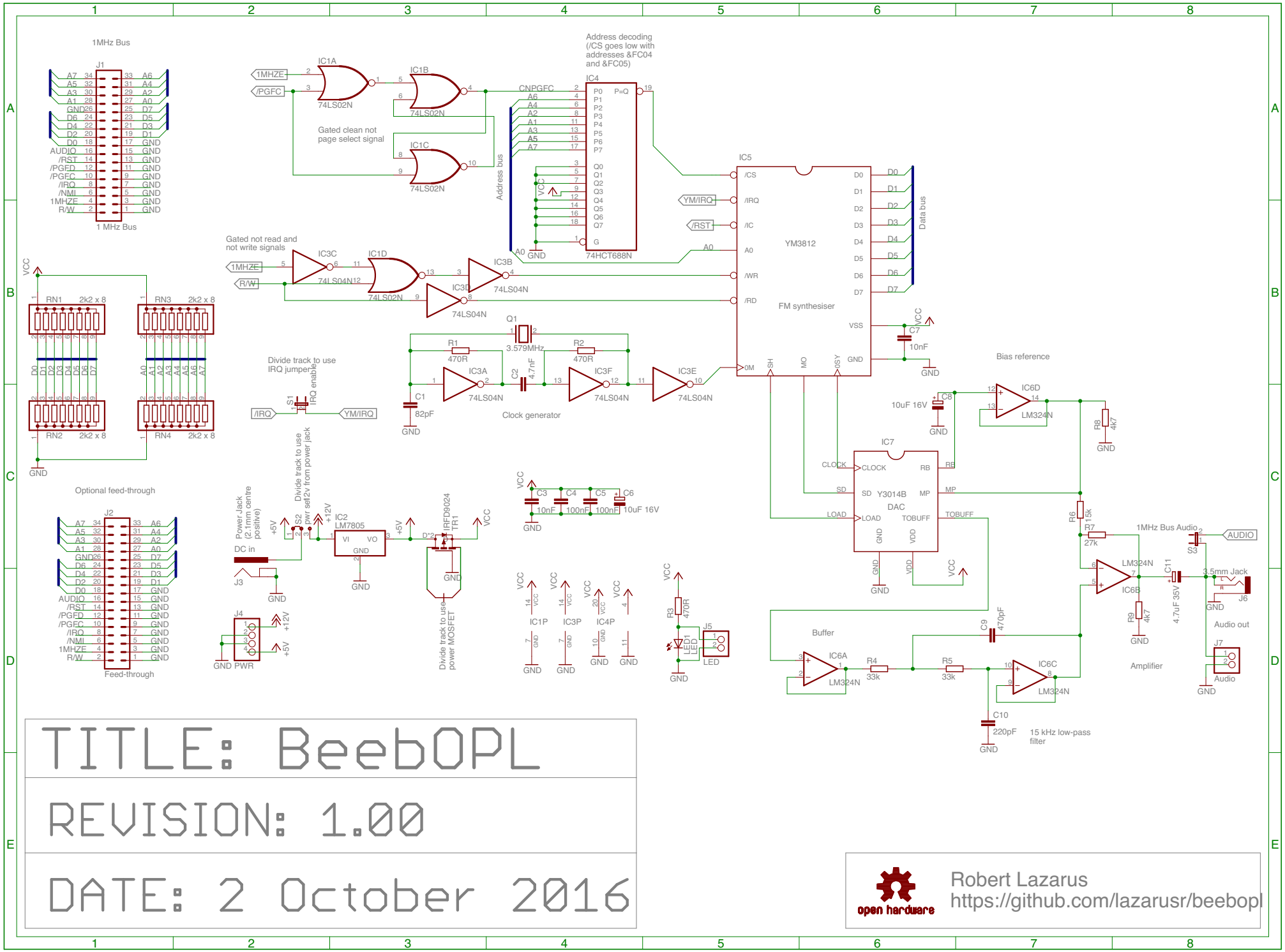

TITLE: BeebOPL

REVISION: 1.00

DATE: 2 October 2016

Robert Lazarus
https://github.com/lazarusr/beebopl