Diploma Programme
Programme du diplôme
Programa del Diploma

Physics
Higher level
Paper 2

Friday 8 May 2015 (morning)

Candidate session number

2 hours 15 minutes

Instructions to candidates

- Write your session number in the boxes above.
- Do not open this examination paper until instructed to do so.
- Section A: answer all questions.
- Section B: answer two questions.
- Write your answers in the boxes provided.
- A calculator is required for this paper.
- A clean copy of the **physics data booklet** is required for this paper.
- The maximum mark for this examination paper is **[95 marks]**.

32 pages

2215–6508
© International Baccalaureate Organization 2015

International Baccalaureate®
Baccalauréat International
Bachillerato Internacional

Please **do not** write on this page.

Answers written on this page will not be marked.

Section A

Answer **all** questions. Write your answers in the boxes provided.

1. This question is about the flow of liquids.

A student carries out an experiment to investigate how the rate of flow *R* of water through a narrow tube varies with the pressure difference across the tube. The pressure difference is proportional to the height *h* shown in the diagram. The student measures *h* in cm with a metre ruler. *R* is obtained by measuring the volume of water collected in a measuring cylinder in a time of 100 s.

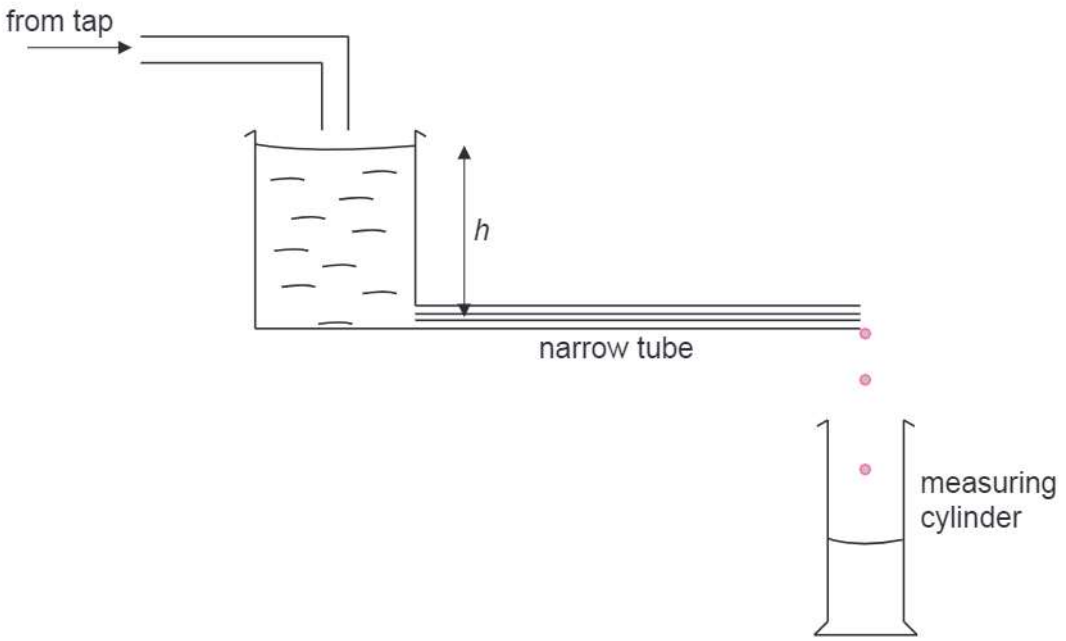

(a) State a suitable unit for *R*. [1]

. . . . . .

(This question continues on the following page)

(Question 1 continued)

(b) The student enters the data on a spreadsheet and produces the graph and trend line shown below.

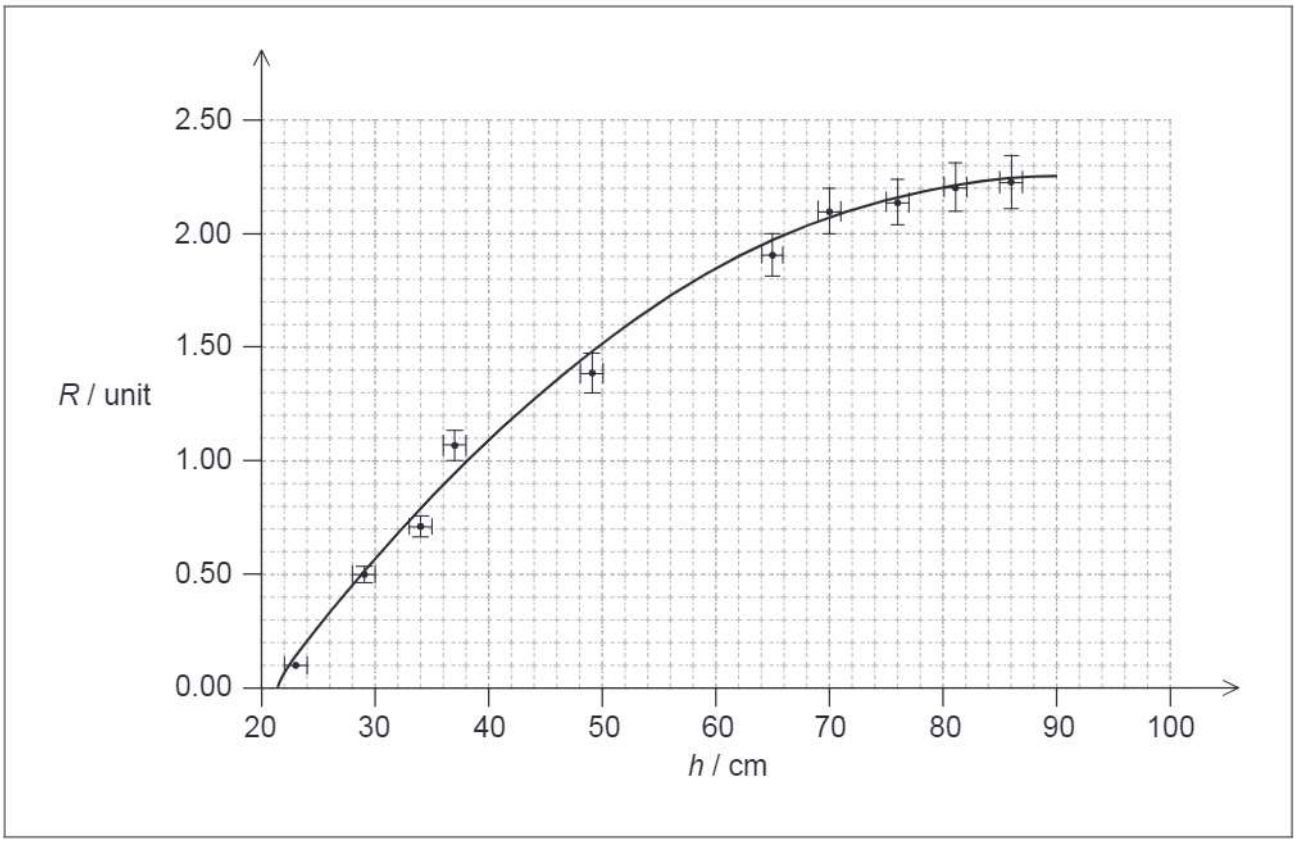

The data point for $h = 57$ cm, $R = 1.70$ units has not been shown on the graph. The student estimates the uncertainties in all values of h to be ± 1 cm and the uncertainties in the values of R to be $\pm 5\,\%$.

(i) On the graph, draw the missing data point. [1]

(ii) On the graph, draw the error bars for this data point. [2]

(iii) Comment on why the trend line is not a perfect match for the data. [1]

. . . . . .

. . . . . .

(This question continues on the following page)

(Question 1 continued)

(iv) Explain why the student's estimate of a 5 % uncertainty in all values for R is unlikely to be correct. [2]

. . . . . .
. . . . . .
. . . . . .
. . . . . .

(c) The equation of the trend line shown in (b) is given by

$$R = -0.0005h^2 + 0.0843h - 1.5632.$$

(i) Calculate the value of R for $h = 0$. [1]

. . . . . .
. . . . . .

(ii) State why this value of R is not physically possible. [1]

. . . . . .
. . . . . .

(iii) State the number of significant figures that you have used for your value in (c)(i). [1]

. . . . . .

(iv) Comment, with reference to the experimental data, on the number of significant figures that you have used for your value in (c)(i). [1]

. . . . . .
. . . . . .

(This question continues on the following page)

(Question 1 continued)

(d) The student estimates that the uncertainty in timing 100 s is ±1 s. Using the data on the graph, deduce the absolute uncertainty in the volume of water collected when $R = 2.1$ units. [4]

. . . . . .

. . . . . .

. . . . . .

. . . . . .

. . . . . .

. . . . . .

. . . . . .

. . . . . .

2. This question is about the forces on a skier.

A skier is pulled up a hill by a rope at a steady velocity. The hill makes an angle of 12° with the horizontal. The mass of the skier and skis is 73 kg. The diagram below shows three of the forces acting on the skier.

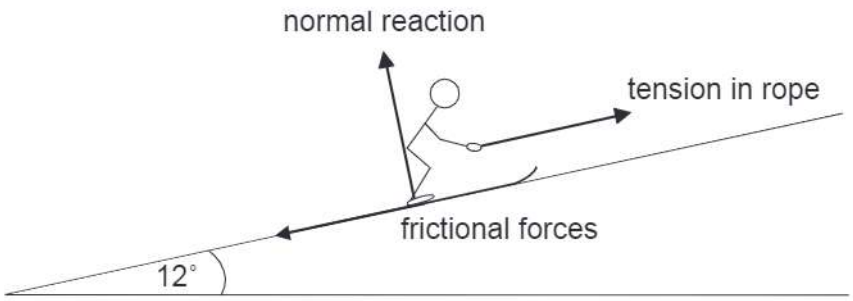

(a) On the diagram, draw and label **one** other force acting on the skier. [1]

(b) Calculate the magnitude of the normal reaction acting on the skier. [2]

. . . . . .
. . . . . .
. . . . . .
. . . . . .

(c) The total frictional force acting is 65 N. Determine the tension in the rope. [2]

. . . . . .
. . . . . .
. . . . . .
. . . . . .

(d) Explain, using Newton's first law of motion, why the resultant force on the skier must be zero. [2]

. . . . . .
. . . . . .
. . . . . .
. . . . . .

3. This question is about a thermistor circuit.

The circuit shows a negative temperature coefficient (NTC) thermistor X and a 100 kΩ fixed resistor R connected across a battery.

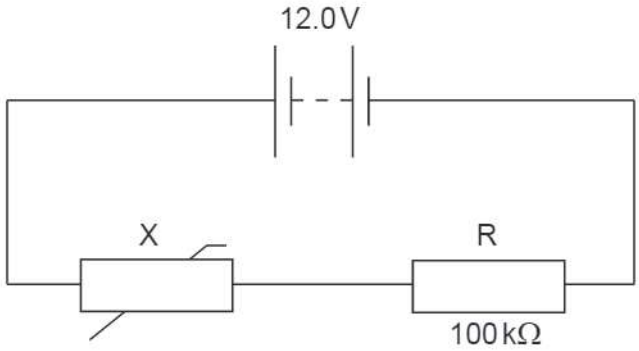

The battery has an electromotive force (emf) of 12.0 V and negligible internal resistance.

(a) Define *electromotive force (emf)*. [1]

. . . . . .

. . . . . .

(b) The graph below shows the variation with temperature T of the resistance R_X of the thermistor.

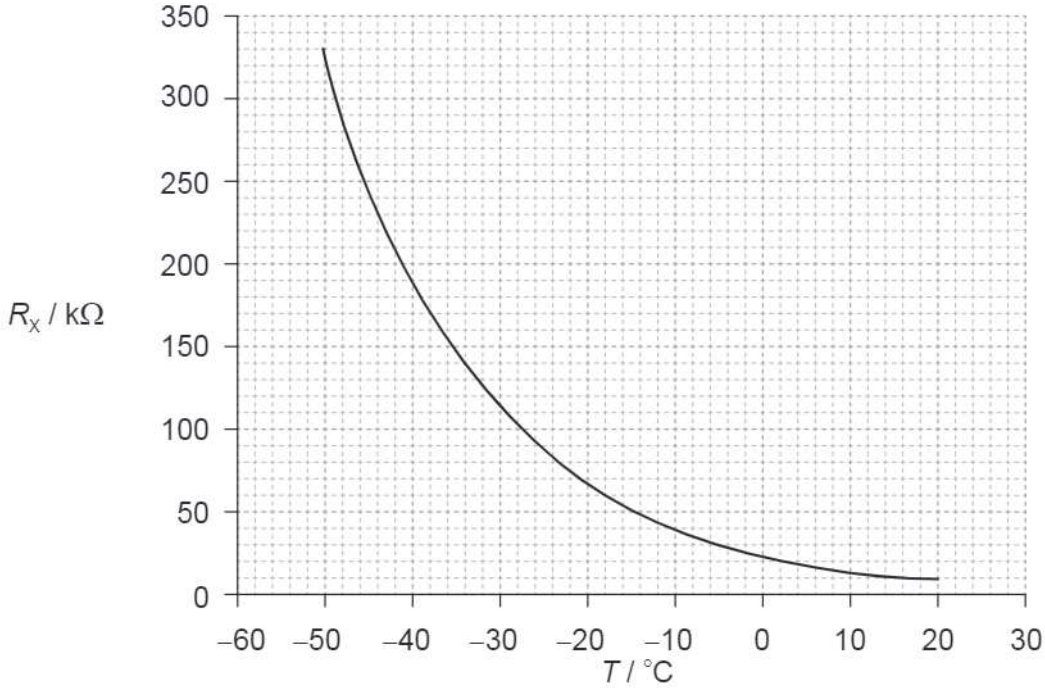

(This question continues on the following page)

(Question 3 continued)

(i) Determine the temperature of X when the potential difference across R is 4.5 V. [4]

. . . . . .

. . . . . .

. . . . . .

. . . . . .

. . . . . .

. . . . . .

. . . . . .

. . . . . .

(ii) State the range of temperatures for which the change in the resistance of the thermistor is most sensitive to changes in temperature. [1]

. . . . . .

(iii) State and explain the effect of a decrease in temperature on the ratio

$$\frac{\text{voltage across X}}{\text{voltage across R}}.$$ [2]

. . . . . .

. . . . . .

. . . . . .

. . . . . .

4. This question is about an ideal gas cycle.

The *P*–*V* diagram shows a cycle ABCDA for a fixed mass of an ideal gas.

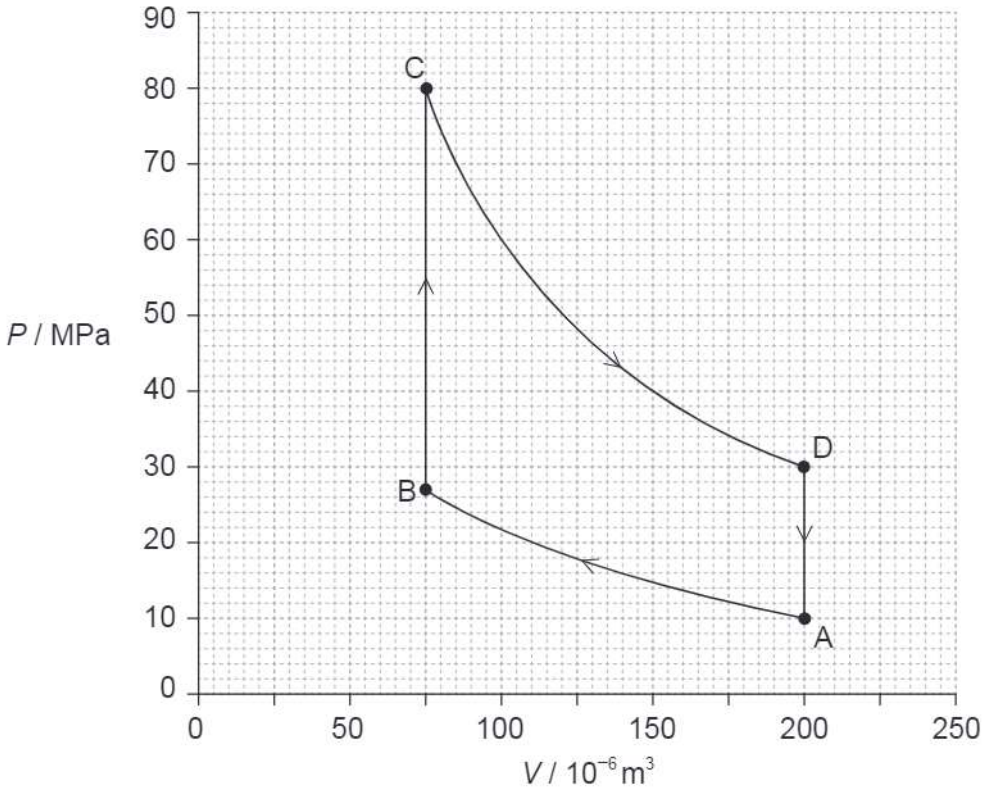

(a) Estimate the total work done in the cycle. [3]

. . . . . .

. . . . . .

. . . . . .

. . . . . .

(This question continues on the following page)

(Question 4 continued)

(b) The change **AB** is isothermal and occurs at a temperature of 420 K. Calculate the number of moles of gas. [3]

. . . . . .
. . . . . .
. . . . . .
. . . . . .
. . . . . .
. . . . . .

(c) Identify and explain the change, if any, in the entropy of the gas when it has completed one cycle. [2]

. . . . . .
. . . . . .
. . . . . .
. . . . . .

5. This question is about a charge-coupled device (CCD).

An 8 megapixel digital camera has a square CCD with a side of length 27 mm. Two objects separated by 5.0 cm produce images 8.0×10^{-4} m apart on the CCD sensor.

(a) Calculate the magnification of the camera. [1]

. . . . . .

. . . . . .

(b) Estimate the length of a pixel on the CCD. [2]

. . . . . .

. . . . . .

. . . . . .

. . . . . .

(c) Determine whether or not the two images will be resolved. [1]

. . . . . .

. . . . . .

(d) (i) Define *quantum efficiency of a pixel*. [1]

. . . . . .

. . . . . .

(ii) Explain the effect of using a CCD with pixels of higher quantum efficiency in the camera. [2]

. . . . . .

. . . . . .

. . . . . .

. . . . . .

Section B

This section consists of four questions: 6, 7, 8 and 9. Answer **two** questions. Write your answers in the boxes provided.

6. This question is about energy sources.

A small island is situated in the Arctic. The islanders require an electricity supply but have no fossil fuels on the island. It is suggested that wind generators should be used in combination with power stations using either oil or nuclear fuel.

(a) Suggest the conditions that would make use of wind generators in combination with either oil or nuclear fuel suitable for the islanders. [3]

. . . . . .

. . . . . .

. . . . . .

. . . . . .

. . . . . .

. . . . . .

(b) Conventional horizontal-axis wind generators have blades of length 4.7 m. The average wind speed on the island is $7.0\,\mathrm{m\,s^{-1}}$ and the average air density is $1.29\,\mathrm{kg\,m^{-3}}$.

(i) Deduce the total energy, in GJ, generated by the wind generators in one year. [3]

. . . . . .

. . . . . .

. . . . . .

. . . . . .

(ii) Explain why less energy can actually be generated by the wind generators than the value you deduced in (b)(i). [2]

. . . . . .

. . . . . .

. . . . . .

. . . . . .

(This question continues on the following page)

(Question 6 continued)

(c) The energy flow diagram (Sankey diagram) below is for an oil-fired power station that the islanders might use.

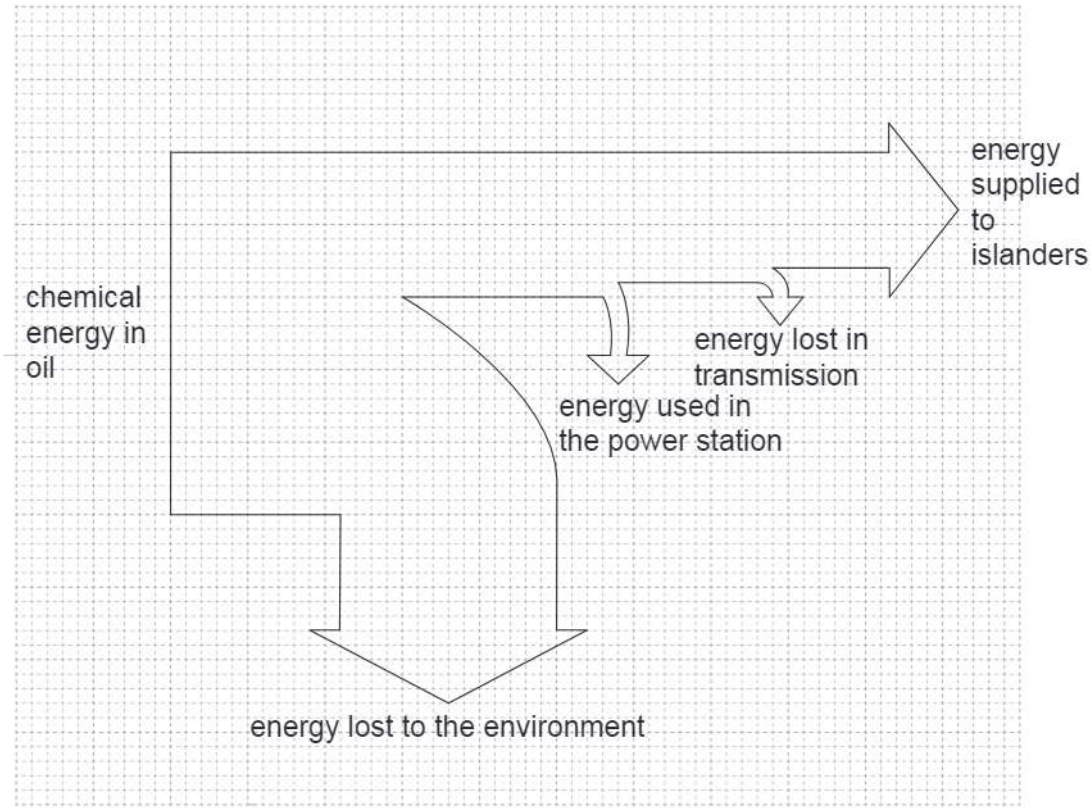

(i) Determine the efficiency of the power station. [2]

. . . . . .

. . . . . .

. . . . . .

. . . . . .

(ii) Explain why energy is wasted in the power station. [1]

. . . . . .

. . . . . .

(This question continues on the following page)

(Question 6 continued)

(iii) The Sankey diagram in (c) indicates that some energy is lost in transmission. Explain how this loss occurs. [1]

. . . . . .

. . . . . .

(d) The emissions from the oil-fired power station in (c) are likely to increase global warming by the enhanced greenhouse effect.

(i) State what is meant by the enhanced greenhouse effect. [2]

. . . . . .

. . . . . .

. . . . . .

. . . . . .

(ii) Outline the mechanism by which greenhouse gases contribute to global warming. [3]

. . . . . .

. . . . . .

. . . . . .

. . . . . .

. . . . . .

. . . . . .

(e) Any nuclear fuel available to the islanders must be enriched before it can be used. Outline why fuel enrichment is needed. [2]

. . . . . .

. . . . . .

. . . . . .

. . . . . .

(This question continues on the following page)

(Question 6 continued)

(f) The nuclear equation below shows one of the possible fission reactions in a nuclear reactor.

$$^{1}_{0}n + ^{...}_{92}U \rightarrow ^{92}_{...}Kr + ^{141}_{56}Ba + ...^{1}_{0}n$$

Identify the missing numbers in the equation. [3]

(g) A nuclear reactor requires both control rods and a moderator to operate. Outline, with reference to neutrons, **one** similarity and **two** differences in the function of each of these components. [3]

. . . . . .

. . . . . .

. . . . . .

. . . . . .

7. This question is in two parts. **Part 1** is about thermal properties of matter. **Part 2** is about quantum physics.

Part 1 Thermal properties of matter

(a) Explain, in terms of the energy of its molecules, why the temperature of a pure substance does not change during melting. [3]

. . . . . .

. . . . . .

. . . . . .

. . . . . .

(b) Three ice cubes at a temperature of 0 °C are dropped into a container of water at a temperature of 22 °C. The mass of each ice cube is 25 g and the mass of the water is 330 g. The ice melts, so that the temperature of the water decreases. The thermal capacity of the container is negligible.

(i) Define *thermal capacity*. [1]

. . . . . .

. . . . . .

(ii) State the SI unit of thermal capacity. [1]

. . . . . .

(This question continues on the following page)

(Question 7, part 1 continued)

(iii) The following data are available.

Specific latent heat of fusion of ice $= 3.3 \times 10^5\ \mathrm{J\,kg^{-1}}$
Specific heat capacity of water $= 4.2 \times 10^3\ \mathrm{J\,kg^{-1}\,K^{-1}}$

Calculate the final temperature of the water when all of the ice has melted. Assume that no thermal energy is exchanged between the water and the surroundings. [4]

. . . . . .
. . . . . .
. . . . . .
. . . . . .
. . . . . .
. . . . . .

(iv) Explain how the first law of thermodynamics applies to the water when the ice cubes are dropped into it. [4]

. . . . . .
. . . . . .
. . . . . .
. . . . . .
. . . . . .
. . . . . .
. . . . . .
. . . . . .

(This question continues on the following page)

(Question 7 continued)

Part 2 Quantum physics

The diagram shows the end of an electron diffraction tube.

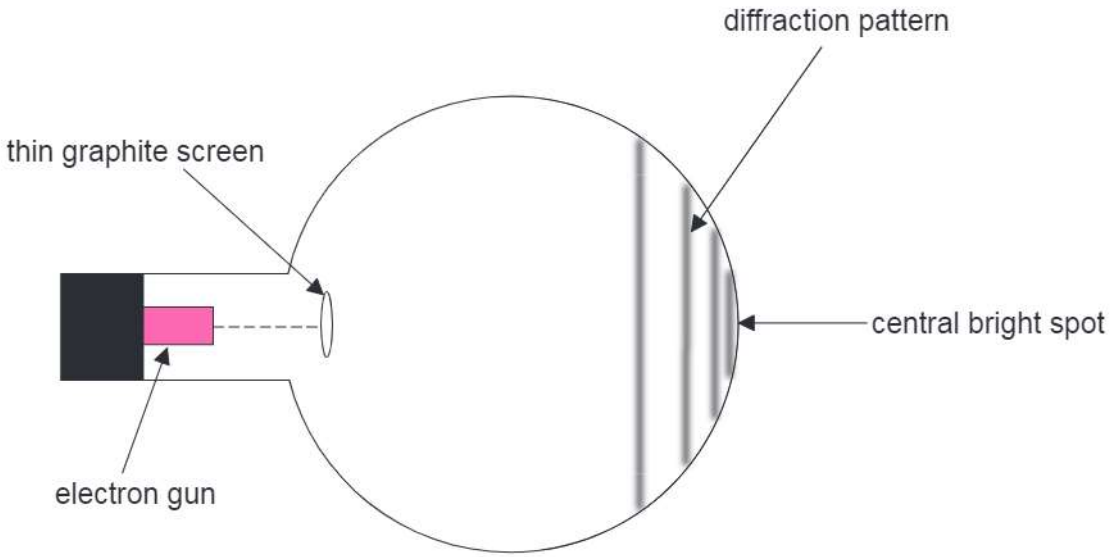

A pattern forms when diffracted electrons are incident on a fluorescent layer at the end of the tube.

(c) Explain how the pattern demonstrates that electrons have wave properties. [3]

. . . . . .

. . . . . .

. . . . . .

. . . . . .

. . . . . .

. . . . . .

(This question continues on the following page)

(Question 7, part 2 continued)

(d) Electrons are accelerated to a speed of $3.6 \times 10^{7}\,\mathrm{m\,s^{-1}}$ by the electric field between the cathode and the anode.

(i) Calculate the de Broglie wavelength of the electrons. [2]

. . . . . .

. . . . . .

. . . . . .

. . . . . .

(ii) The cathode and anode are 22 mm apart and the field is uniform.
The potential difference between the cathode and the anode is 3.7 kV.
Show that the acceleration of the electrons is approximately $3 \times 10^{16}\,\mathrm{m\,s^{-2}}$. [3]

. . . . . .

. . . . . .

. . . . . .

. . . . . .

. . . . . .

. . . . . .

(e) State what can be deduced about an electron from the amplitude of its associated wavefunction. [2]

. . . . . .

. . . . . .

. . . . . .

. . . . . .

(This question continues on the following page)

(Question 7, part 2 continued)

(f) An electron reaching the central bright spot on the fluorescent screen has a small uncertainty in its position. Outline what the Heisenberg uncertainty principle is able to predict about another property of this electron. [2]

. . . . . .

. . . . . .

. . . . . .

. . . . . .

8. This question is in two parts. **Part 1** is about the electrical and magnetic characteristics of a loudspeaker. **Part 2** is about vibrations and waves.

Part 1 Electrical and magnetic characteristics of a loudspeaker

The diagram shows the main features of a loudspeaker L. A current-carrying coil is positioned within the magnetic field provided by a permanent magnet. The diagram also shows the directions of the magnetic field and of the current in the coil at a particular instant. The dust cap D prevents dust from blocking the gap between the cardboard tube and the south pole of the magnet.

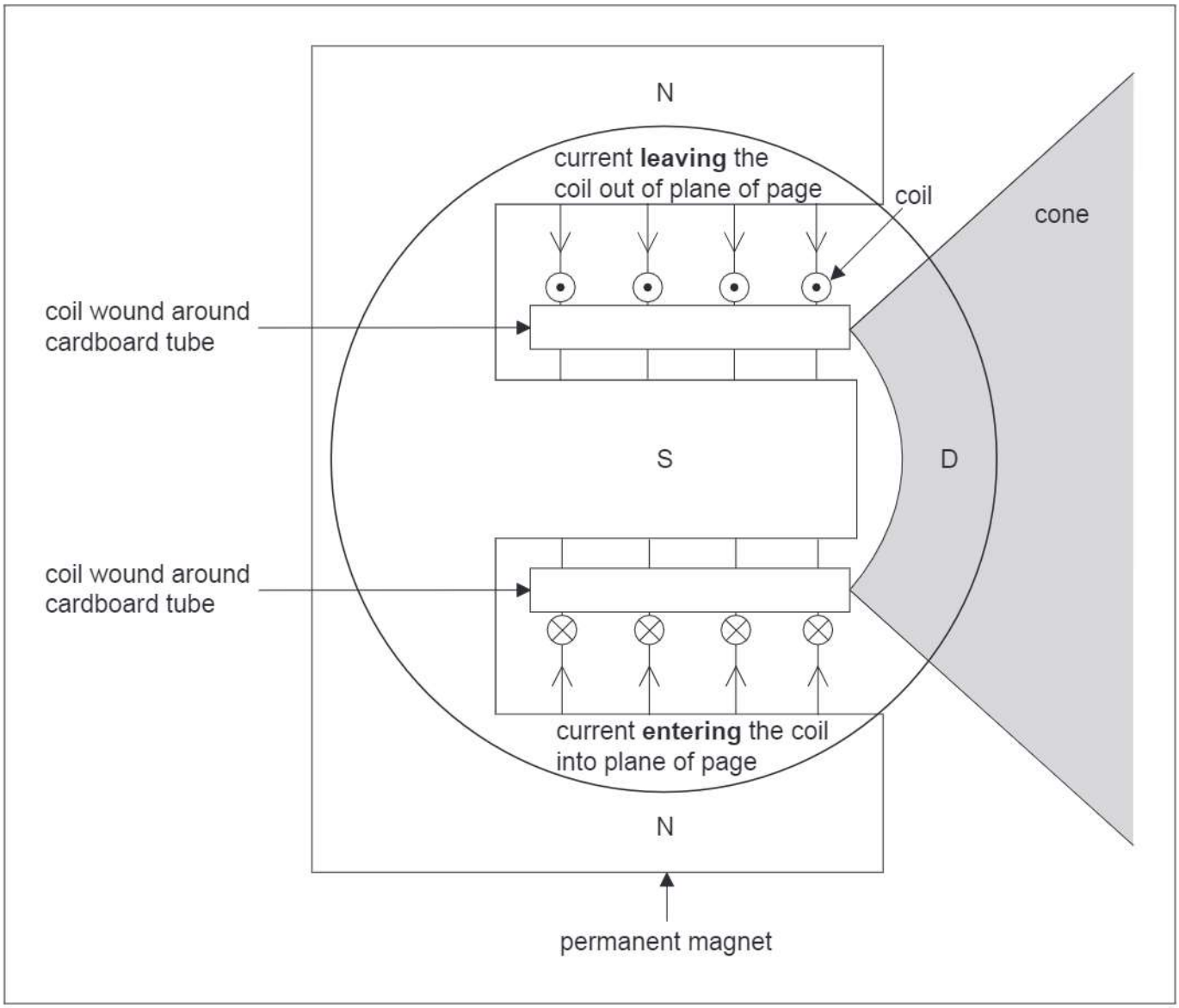

(This question continues on the following page)

(Question 8, part 1 continued)

The coil consists of 150 turns, each of average diameter 2.5 cm. The magnetic field of the permanent magnet has strength 0.40 mT. The peak current in the coil is 0.45 mA.

(a) Identify, **on the diagram**, the direction of the force on the coil with the current directions shown. [2]

(b) Calculate the maximum magnetic force acting on the coil. [3]

. . . . . .
. . . . . .
. . . . . .
. . . . . .

(c) Assuming that the current is sinusoidal, calculate the root mean squared (rms) of the current in the coil. [1]

. . . . . .
. . . . . .
. . . . . .
. . . . . .

(d) Explain, with reference to electromagnetic induction, the effect of the motion of the coil on the current. [3]

. . . . . .
. . . . . .
. . . . . .
. . . . . .

(This question continues on the following page)

(Question 8 continued)

Part 2 Vibrations and waves

The cone and dust cap D of a loudspeaker L vibrates with a frequency of 1.25 kHz with simple harmonic motion (SHM).

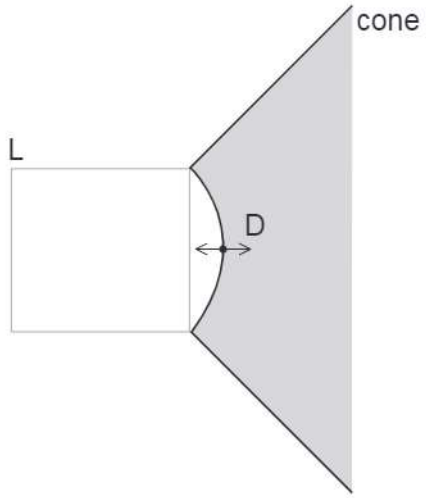

(e) Define *simple harmonic motion (SHM)*. [2]

. . . . . .

. . . . . .

. . . . . .

. . . . . .

(f) D has mass 6.5×10^{-3} kg and vibrates with amplitude 0.85 mm.

(i) Calculate the maximum acceleration of D. [2]

. . . . . .

. . . . . .

. . . . . .

. . . . . .

(This question continues on the following page)

(Question 8, part 2 continued)

(ii) Determine the total energy of D. [2]

. . . . . .
. . . . . .
. . . . . .
. . . . . .

(g) The sound waves from the loudspeaker travel in air with speed $330\,\mathrm{m\,s^{-1}}$.

(i) Calculate the wavelength of the sound waves. [1]

. . . . . .
. . . . . .

(ii) Describe the characteristics of sound waves in air. [3]

. . . . . .
. . . . . .
. . . . . .
. . . . . .
. . . . . .
. . . . . .

(This question continues on the following page)

(Question 8, part 2 continued)

(h) A second loudspeaker S emits the same frequency as L but vibrates out of phase with L. The graph below shows the variation with time t of the displacement x of the waves emitted by S and L.

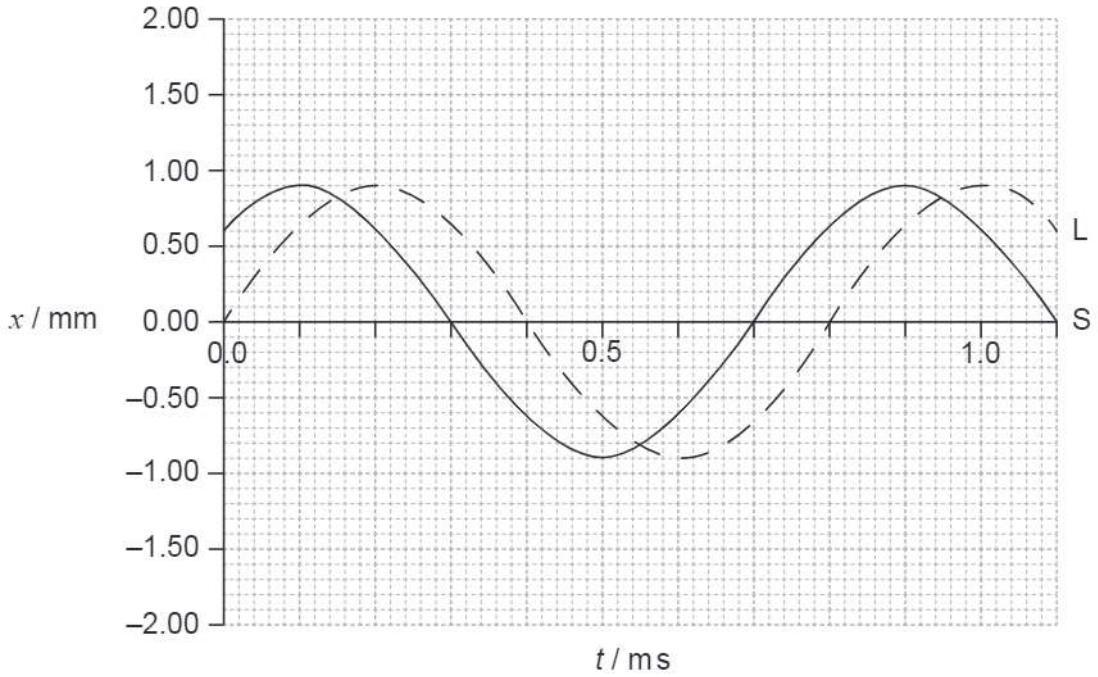

(i) Deduce the relationship between the phase of L and the phase of S. [3]

. . . . . .

. . . . . .

. . . . . .

. . . . . .

(ii) On the graph, sketch the variation with t of x for the wave formed by the superposition of the two waves. [3]

Please **do not** write on this page.

Answers written on this page will not be marked.

9. This question is in **two** parts. **Part 1** is about kinematics and gravitation. **Part 2** is about radioactivity.

Part 1 Kinematics and gravitation

A ball is released near the surface of the Moon at time $t = 0$. The point of release is on a straight line between the centre of Earth and the centre of the Moon. The graph below shows the variation with time t of the displacement s of the ball from the point of release.

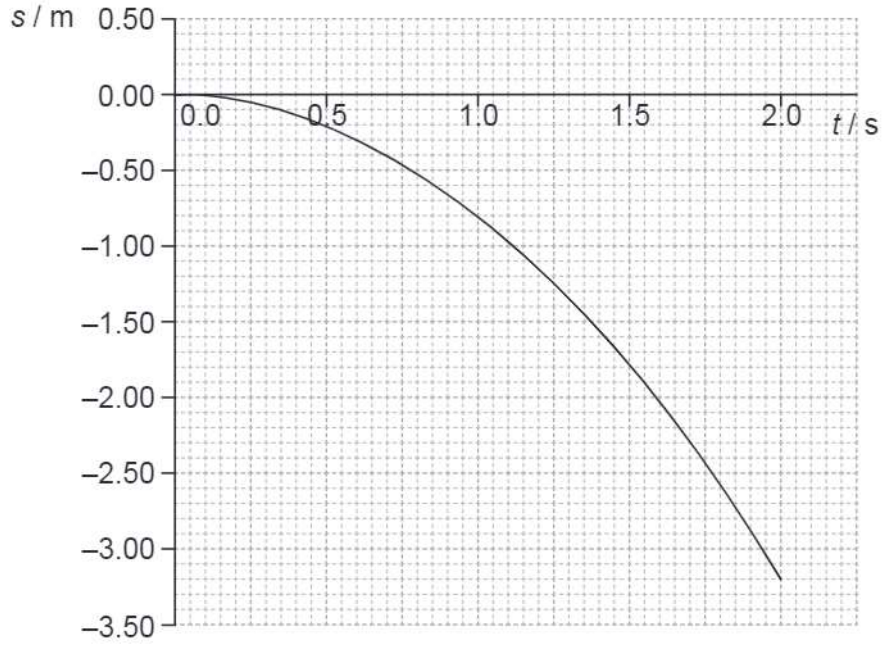

(a) State the significance of the negative values of s. [1]

. . . . . .

. . . . . .

(b) Use the graph to

(i) estimate the velocity of the ball at $t = 0.80$ s. [3]

. . . . . .

. . . . . .

. . . . . .

. . . . . .

(This question continues on the following page)

(Question 9, part 1 continued)

(ii) calculate a value for the acceleration of free fall close to the surface of the Moon. [3]

. . . . . .
. . . . . .
. . . . . .
. . . . . .

(c) The following data are available.

Mass of the ball	$= 0.20\,\text{kg}$
Mean radius of the Moon	$= 1.74 \times 10^{6}\,\text{m}$
Mean orbital radius of the Moon about the centre of Earth	$= 3.84 \times 10^{8}\,\text{m}$
Mass of Earth	$= 5.97 \times 10^{24}\,\text{kg}$

Show that Earth has no significant effect on the acceleration of the ball. [4]

. . . . . .
. . . . . .
. . . . . .
. . . . . .
. . . . . .
. . . . . .

(d) Calculate the speed of an identical ball when it falls 3.0 m from rest close to the surface of Earth. Ignore air resistance. [1]

. . . . . .
. . . . . .

(e) Sketch, on the graph, the variation with time t of the displacement s from the point of release of the ball when the ball is dropped close to the surface of Earth. (For this sketch take the direction towards the Earth as being negative.) [3]

(This question continues on the following page)

(Question 9 continued)

Part 2 Radioactivity

Radium-224 $\left({}^{224}_{88}\text{Ra}\right)$ is a radioactive nuclide that decays to form radon-220. Radon-220 is itself radioactive and undergoes a further decay. The table shows the series of radioactive nuclides that are formed as the decays proceed. The series ends with a stable isotope of lead.

Parent nuclide	Emitter	Half-life	Daughter nuclide(s)
radium-224	alpha	3.64 days	radon-220 (Rn)
radon-220	alpha	55 seconds	polonium-216 (Po)
polonium-216	alpha	0.15 seconds	lead-212 (Pb)
lead-212	beta	10.6 hours	bismuth-212 (Bi)
bismuth-212	beta alpha	60.6 minutes	polonium-212 thallium (Tl)
polonium-212	alpha	3.0×10^{-7} seconds	lead-208 (stable)
thallium	beta	3.1 minutes	lead-208 (stable)

(f) For the final thallium nuclide, identify the

(i) nucleon number. [1]

. . . . . .

(ii) proton number. [1]

. . . . . .

(This question continues on the following page)

(Question 9, part 2 continued)

(g) Radon-220 is a radioactive gas. It is released by rocks such as granite. In some parts of the world, houses are built from materials containing granite. Explain why it is unlikely that radon-220 will build up in sufficient quantity to be harmful in these houses. [2]

. . . . . .

. . . . . .

. . . . . .

. . . . . .

(h) (i) Calculate, in $hour^{-1}$, the decay constant of lead-212. [1]

. . . . . .

. . . . . .

. . . . . .

. . . . . .

(ii) In a pure sample of lead-212 at one instant, 8.0×10^{-3} kg of the lead-212 is present. Calculate the mass of lead-212 that remains after a period of 35 hours. [3]

. . . . . .

. . . . . .

. . . . . .

. . . . . .

. . . . . .

. . . . . .

. . . . . .

(This question continues on the following page)

(Question 9, part 2 continued)

(iii) A sample of pure radium begins to decay by the series shown in the table. At one instant, a mass of 8.0×10^{-3} kg of lead-212 is present in the sample. Suggest why, after 35 hours, there will be a greater mass of lead-212 present in the sample than the value you calculated in (h)(ii). [2]

. . . . . .

. . . . . .

. . . . . .

. . . . . .